THE LEARNING EXPERIENCE
ACADEMY OF EARLY EDUCATION

501 Talcottville Road
Vernon, Connecticut

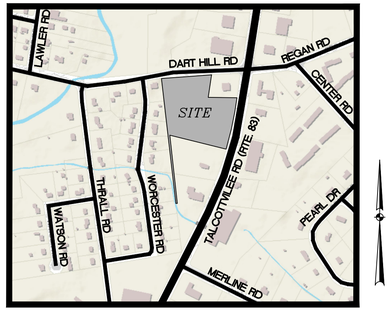

KEY PLAN MAP
1"=500'

ALTERNATE #2

DRAWING INDEX

SHEET TITLE	SHEET NO.	LATEST REVISION
CIVIL		
COVER SHEET	1 of 12	4–06–2022
EXISTING CONDITIONS & DEMOLITION PLAN	2 of 12	3–26–2022
LAYOUT PLAN	3 of 12	3–26–2022
GRADING & EROSION & SEDIMENT CONTROL PLAN	4 of 12	3–26–2022
STORM SEWER PLAN	5 of 12	3–26–2022
UTILITY PLAN	6 of 12	3–28–2022
PLANTING PLAN	7 of 12	4–06–2022
EROSION & SEDIMENT CONTROL NOTES	8 of 12	3–26–2022
DETAILS	9 of 12	3–26–2022
DETAILS	10 of 12	3–26–2022
DETAILS	11 of 12	3–26–2022
DETAILS	12 of 12	3–26–2022

Applicant
Vernon Development LLC
56 East Main Street
Avon, CT 06001
(860) 677–5607

Owner
501 Talcottville Road LLC
43 Ridgecrest Lane
Bristol, CT 06010–2910

LADA, P.C.
Land Planners
104 West Street
Simsbury, CT 06070 (860) 651-4971
Brewster, NY 10509 (845) 278-7424
Email: ladapc@snet.net

RUSSO
SURVEYORS • ENGINEERS
SERVING CT & MA
J.R. Russo & Associates, LLC
1 Shoham Rd East Windsor CT 06088 • CT 860.623.0569 • MA 413.785.1158
www.jrrusso.com • info@jrrusso.com

S:\Acad\2021 Civil 3D\2021-083 Vernon Development - 501 Talcottville Rd\Russo Drawings\2021-083 B - Pushed forward.dwg

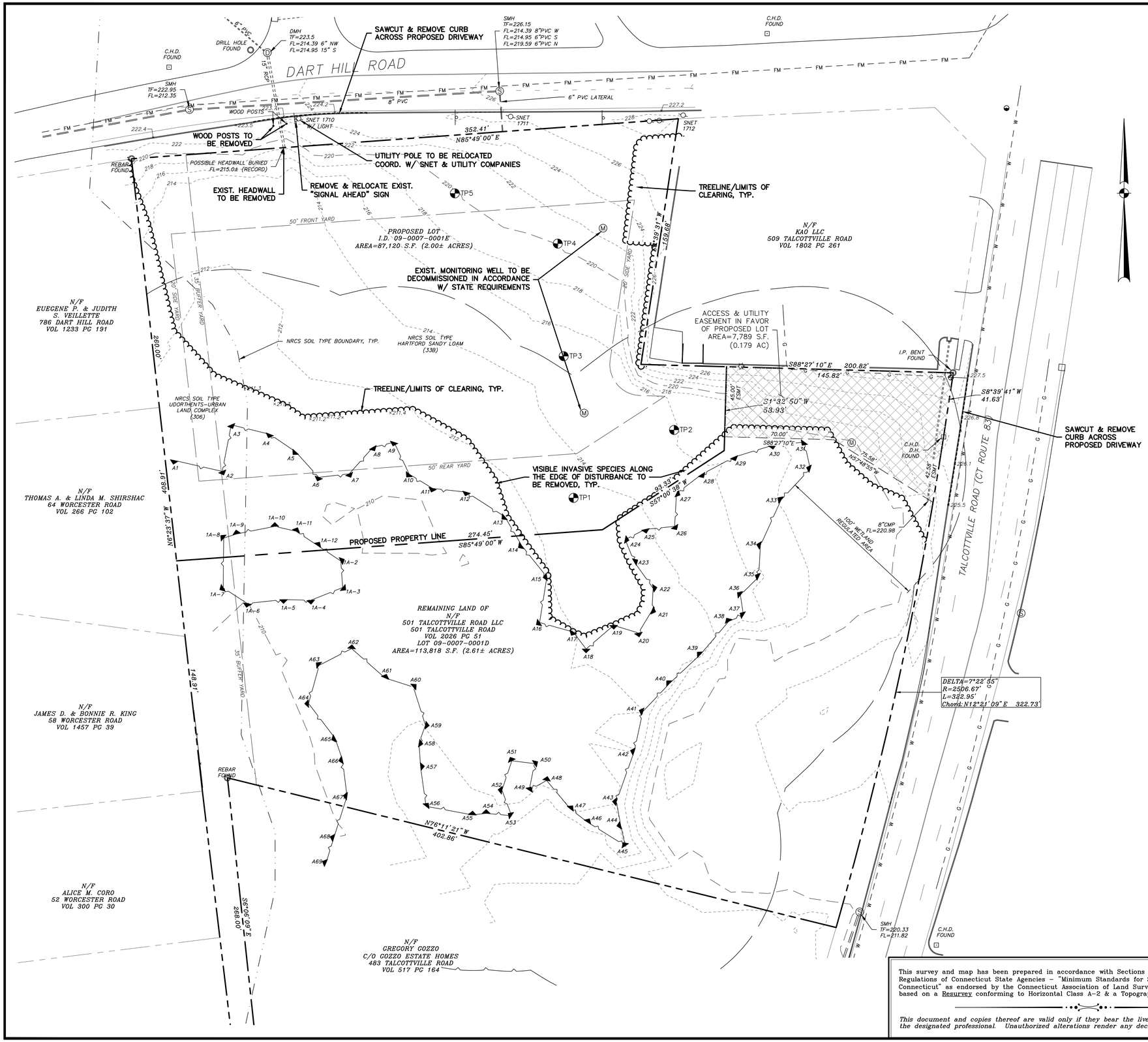

Reference Maps:

1. "Boundary Survey Prepared for 501 Talcottville Road LLC, 501 Talcottville Road (CT Route 83) & Dart Hill Road, Vernon, Connecticut" Sheet SV.01, Scale: 1"=50' Date: May 2021 by Alfred Benesch & Company.
2. "Topographic Survey Prepared for 501 Talcottville Road LLC, 501 Talcottville Road (CT Route 83) & Dart Hill Road, Vernon, Connecticut" Sheet SV.02Scale: 1"=30' Date: May 2021 by Alfred Benesch & Company.

Notes:

1. Portion of the parcel is located in inland wetlands as delineated by Rema Ecological Services per reference map #2.
2. Proposed lot does not lie within a special flood hazard area per "FEMA flood insurance rate map, town of Vernon, Connecticut community panel number 0901310005C, revised August 9, 1999".
3. Horizontal and vertical datums are based upon map references prepared by Alfred Benesch & Company.
4. All underground utility locations on this plan are approximate and may not be complete. Anyone using this information without verifying the locations does so at their own risk. No construction will be done on this site prior to utility mark out. "Call Before You Dig 1-800-922-4455".
5. Boundary and existing conditions shown hereon are based on map references prepared by Alfred Benesch & Company.
6. Line striping in Talcottville Road (Rte. 83) approximated based on aerial photography.

LEGEND

	EXISTING UTILITY POLE
UG	PROPOSED UNDERGROUND ELECTRIC
G	EXISTING GAS LINE
G	PROPOSED GAS LINE
W	EXISTING WATER LINE
W	PROPOSED WATER LINE
FP	PROPOSED FIRE PROTECTION LINE
	EXISTING CATCH BASIN
	PROPOSED CATCH BASIN
	EXISTING DRAINAGE MANHOLE
	PROPOSED DRAINAGE MANHOLE
	EXISTING STORM SEWER
	PROPOSED STORM SEWER
RL	PROPOSED ROOF LEADER
S	EXISTING SANITARY MANHOLE
	EXISTING SANITARY SEWER
FM	EXISTING SANITARY FORCE MAIN
S	PROPOSED SANITARY SEWER
	EXISTING SIGN
	PROPOSED SIGN
	EXISTING IRON PIN (FOUND)
	PROPOSED IRON PIN (TO BE SET)
	EXISTING MONUMENT (FOUND)
135x5	EXISTING SPOT GRADE
135.5	PROPOSED SPOT GRADE
136	EXISTING CONTOUR
136	PROPOSED CONTOUR
	LIMIT OF WETLANDS
	PROPERTY LINE
	EASEMENT LINE
	BUILDING LINE
	STAKED HAYBALES OR SILT FENCE

GRAPHIC SCALE

30 0 15 30 60 120

(IN FEET)
1 inch = 30 ft.

This survey and map has been prepared in accordance with Sections 20-300b-1 thru 20-300b-20 of the Regulations of Connecticut State Agencies - "Minimum Standards for Surveys and Maps in the State of Connecticut" as endorsed by the Connecticut Association of Land Surveyors, Inc. It is a Property Survey based on a Resurvey conforming to Horizontal Class A-2 & a Topographic Survey conforming to Class T-2.

This document and copies thereof are valid only if they bear the live signature and embossed seal of the designated professional. Unauthorized alterations render any declaration hereon null and void.

TO THE BEST OF MY KNOWLEDGE AND BELIEF THIS MAP IS SUBSTANTIALLY CORRECT AS NOTED HEREON.

RUSSO
SURVEYORS • ENGINEERS
SERVING CT & MA
J.R. Russo & Associates, LLC
1 Sheham Rd East Windsor, CT 06088 • CT 860.623.0569 • MA 413.785.1158
www.jrrusso.com • info@jrrusso.com

Applicant
Vernon Development LLC
56 East Main Street
Avon, Connecticut 06001

BY:	DATE	REVISIONS
LF/TAC	3-28-2022	TALCOTTVILLE RD ENTRANCE, APPLY VARIANCES
LF/TAC	2-14-2022	PAGE NUMBERS

CHK: JEU

The Learning Experience
Property Of
501 Talcottville Road, LLC
501 Talcottville Road
Vernon, Connecticut 06010
Parcel ID: 09-0007-0001D (Zone: C)

Existing Conditions & Demolition Plan
(ALT 2)

DATE
1-11-22

SCALE
1"=30'

JOB NUMBER
2021-083

SHEET
2 of 12

S:\Acad\2021 Civil 3D\2021-083 Vernon Development - 501 Talcottville Rd\Russo Drawings\2021-083 B - Pushed forward.dwg

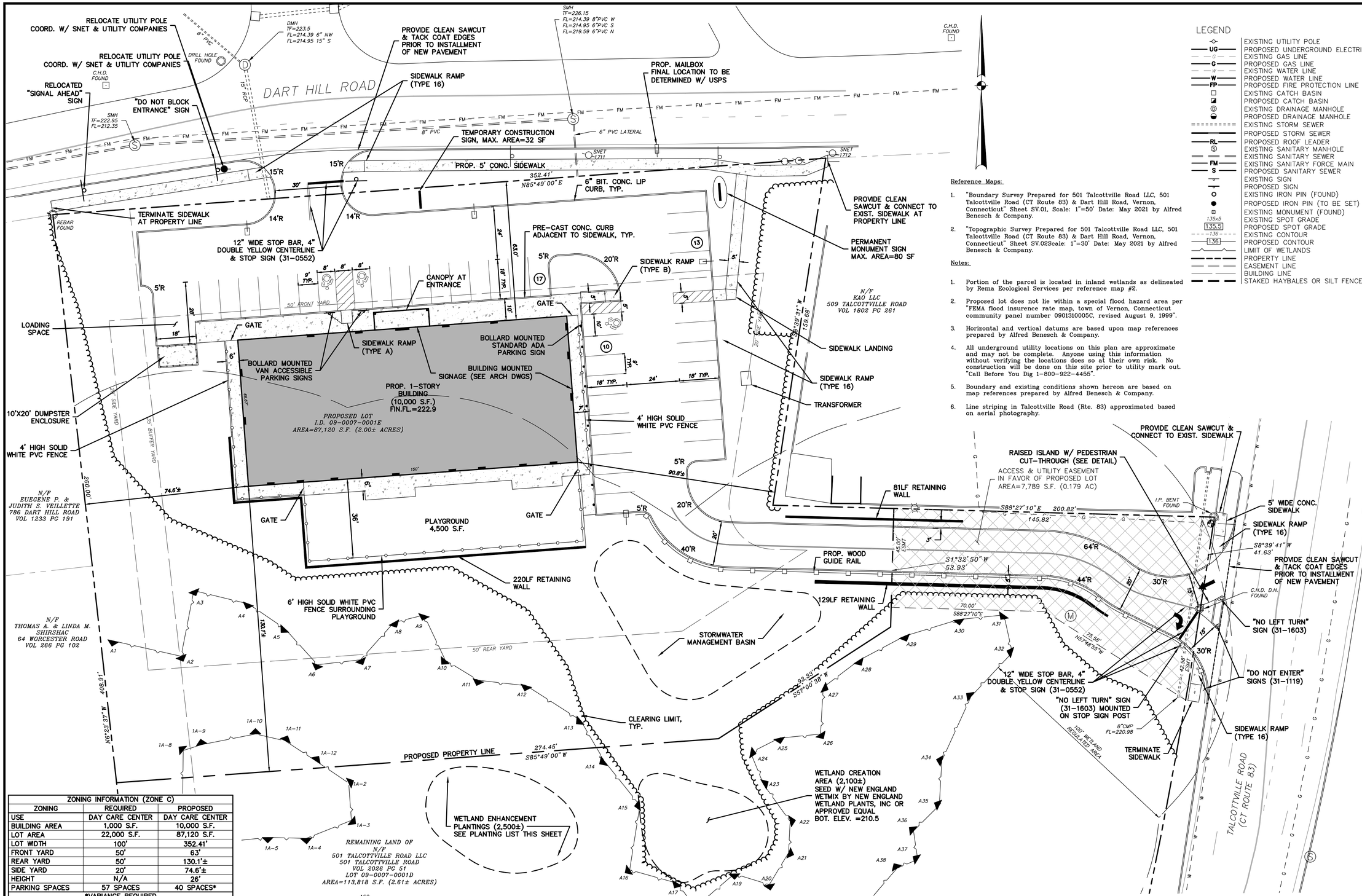

LEGEND

	EXISTING UTILITY POLE
UG	PROPOSED UNDERGROUND ELECTRIC
G	EXISTING GAS LINE
G	PROPOSED GAS LINE
W	EXISTING WATER LINE
W	PROPOSED WATER LINE
FP	PROPOSED FIRE PROTECTION LINE
	EXISTING CATCH BASIN
	PROPOSED CATCH BASIN
	EXISTING DRAINAGE MANHOLE
	PROPOSED DRAINAGE MANHOLE
	EXISTING STORM SEWER
	PROPOSED STORM SEWER
RL	PROPOSED ROOF LEADER
	EXISTING SANITARY MANHOLE
	EXISTING SANITARY SEWER
FM	EXISTING SANITARY FORCE MAIN
S	PROPOSED SANITARY SEWER
	EXISTING SIGN
	PROPOSED SIGN
	EXISTING IRON PIN (FOUND)
	PROPOSED IRON PIN (TO BE SET)
	EXISTING MONUMENT (FOUND)
135x5	EXISTING SPOT GRADE
135.5	PROPOSED SPOT GRADE
136	EXISTING CONTOUR
136	PROPOSED CONTOUR
	LIMIT OF WETLANDS
	PROPERTY LINE
	EASEMENT LINE
	BUILDING LINE
	STAKED HAYBALES OR SILT FENCE

Reference Maps:

1. "Boundary Survey Prepared for 501 Talcottville Road LLC, 501 Talcottville Road (CT Route 83) & Dart Hill Road, Vernon, Connecticut" Sheet SV.01, Scale: 1"=50' Date: May 2021 by Alfred Benesch & Company.
2. "Topographic Survey Prepared for 501 Talcottville Road LLC, 501 Talcottville Road (CT Route 83) & Dart Hill Road, Vernon, Connecticut" Sheet SV.02Scale: 1"=30' Date: May 2021 by Alfred Benesch & Company.

Notes:

1. Portion of the parcel is located in inland wetlands as delineated by Rema Ecological Services per reference map #2.
2. Proposed lot does not lie within a special flood hazard area per "FEMA flood insurence rate map, town of Vernon, Connecticut community panel number 09013100005C, revised August 9, 1999".
3. Horizontal and vertical datums are based upon map references prepared by Alfred Benesch & Company.
4. All underground utility locations on this plan are approximate and may not be complete. Anyone using this information without verifying the locations does so at their own risk. No construction will be done on this site prior to utility mark out. "Call Before You Dig 1-800-922-4455".
5. Boundary and existing conditions shown hereon are based on map references prepared by Alfred Benesch & Company.
6. Line striping in Talcottville Road (Rte. 83) approximated based on aerial photography.

ZONING INFORMATION (ZONE C)		
ZONING	REQUIRED	PROPOSED
USE	DAY CARE CENTER	DAY CARE CENTER
BUILDING AREA	1,000 S.F.	10,000 S.F.
LOT AREA	22,000 S.F.	87,120 S.F.
LOT WIDTH	100'	352.41'
FRONT YARD	50'	63'
REAR YARD	50'	130.1'±
SIDE YARD	20'	74.6'±
HEIGHT	N/A	26'
PARKING SPACES	57 SPACES	40 SPACES*
*VARIANCE REQUIRED		

PROP. BUILDING COVERAGE: 11.5% (10,000 S.F.)
PROP. LOT COVERAGE: 43.9% (38,211 S.F.)

PARKING REQUIREMENTS
DAYCARE: 1 SPACE/1 EMPLOYEE * 26 EMPLOYEES = 26 SPACES
1 SPACE/5 STUDENTS * 153 STUDENTS = 30.6 SPACES

TOTAL SPACES REQUIRED: 57 SPACES
TOTAL SPACES PROVIDED: 40 SPACES (3 HANDICAP ACCESSIBLE)

This survey and map has been prepared in accordance with Sections 20-300b-1 thru 20-300b-20 of the Regulations of Connecticut State Agencies - "Minimum Standards for Surveys and Maps in the State of Connecticut" as endorsed by the Connecticut Association of Land Surveyors, Inc. It is a Property Survey based on a Resurvey conforming to Horizontal Class A-2 & a Topographic Survey conforming to Class T-2.

This document and copies thereof are valid only if they bear the live signature and embossed seal of the designated professional. Unauthorized alterations render any declaration hereon null and void.

TO THE BEST OF MY KNOWLEDGE AND BELIEF THIS MAP IS SUBSTANTIALLY CORRECT AS NOTED HEREON.

RUSSO
SURVEYORS • ENGINEERS
SERVING CT & MA
J.R. Russo & Associates, LLC
1 Shoham Rd East Windsor, CT 06088 • CT 860.623.0569 • MA 413.785.1158
www.jrrusso.com • info@jrrusso.com

Applicant
Vernon Development LLC
56 East Main Street
Avon, Connecticut 06001

REVISIONS		
3-26-2022	TALCOTTVILLE RD ENTRANCE, APPLY VARIANCES	
2-14-2022	WETLAND MITIGATION, LEAK-OFF, BASIN OUTLET	
BY: LF/TAC	CHK: JEU	

The Learning Experience
Property Of
501 Talcottville Road, LLC
501 Talcottville Road
Vernon, Connecticut 06010
Parcel ID: 09-0007-0001D (Zone: C)

Layout Plan
(ALT 2)

DATE 1-11-22
SCALE 1"=20'
JOB NUMBER 2021-083
SHEET 3 of 12

S:\Acad\2021 Civil 3D\2021-083 Vernon Development - 501 Talcottville Rd\Russo Drawings\2021-083 B - Pushed forward.dwg

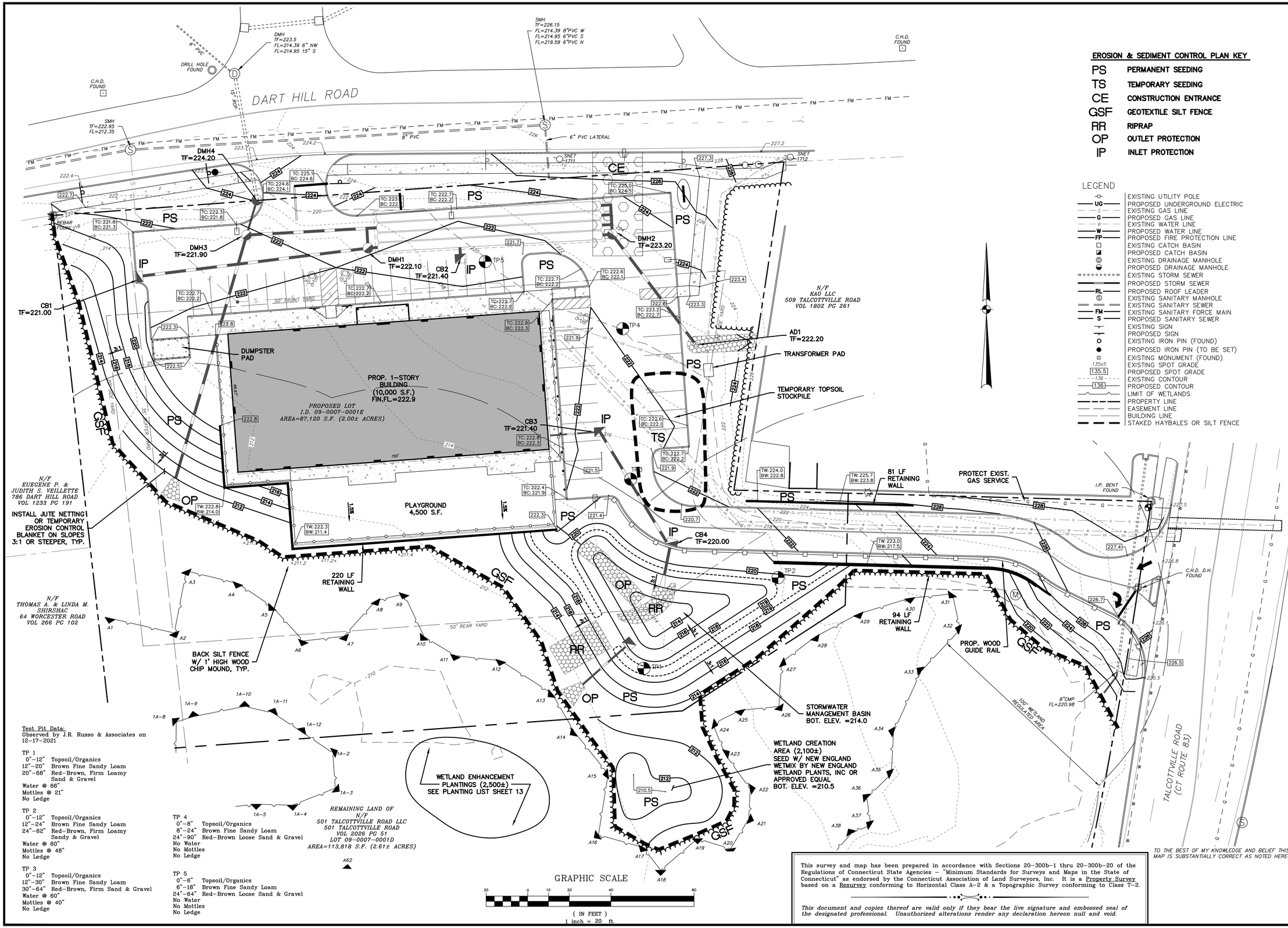

EROSION & SEDIMENT CONTROL PLAN KEY

PS	PERMANENT SEEDING
TS	TEMPORARY SEEDING
CE	CONSTRUCTION ENTRANCE
GSF	GEOTEXTILE SILT FENCE
RR	RIPRAP
OP	OUTLET PROTECTION
IP	INLET PROTECTION

LEGEND

- EXISTING UTILITY POLE
- UG — PROPOSED UNDERGROUND ELECTRIC
- EXISTING GAS LINE
- G — PROPOSED GAS LINE
- EXISTING WATER LINE
- W — PROPOSED WATER LINE
- FP — PROPOSED FIRE PROTECTION LINE
- EXISTING CATCH BASIN
- PROPOSED CATCH BASIN
- EXISTING DRAINAGE MANHOLE
- PROPOSED DRAINAGE MANHOLE
- EXISTING STORM SEWER
- PROPOSED STORM SEWER
- RL — PROPOSED ROOF LEADER
- EXISTING SANITARY MANHOLE
- EXISTING SANITARY SEWER
- FM — EXISTING SANITARY FORCE MAIN
- S — PROPOSED SANITARY SEWER
- EXISTING SIGN
- PROPOSED SIGN
- EXISTING IRON PIN (FOUND)
- PROPOSED IRON PIN (TO BE SET)
- EXISTING MONUMENT (FOUND)
- 135x5 — EXISTING SPOT GRADE
- 135.5 — PROPOSED SPOT GRADE
- 136 — EXISTING CONTOUR
- 136 — PROPOSED CONTOUR
- LIMIT OF WETLANDS
- PROPERTY LINE
- EASEMENT LINE
- BUILDING LINE
- STAKED HAYBALES OR SILT FENCE

Test Pit Data:
Observed by J.R. Russo & Associates on 12-17-2021

TP 1
0"-12" Topsoil/Organics
12"-20" Brown Fine Sandy Loam
20"-68" Red-Brown, Firm Loamy Sand & Gravel
Water @ 66"
Mottles @ 21"
No Ledge

TP 2
0"-12" Topsoil/Organics
12"-24" Brown Fine Sandy Loam
24"-62" Red-Brown, Firm Loamy Sand & Gravel
Water @ 60"
Mottles @ 48"
No Ledge

TP 3
0"-12" Topsoil/Organics
12"-30" Brown Fine Sandy Loam
30"-64" Red-Brown, Firm Sand & Gravel
Water @ 60"
Mottles @ 40"
No Ledge

TP 4
0"-8" Topsoil/Organics
8"-24" Brown Fine Sandy Loam
24"-90" Red-Brown Loose Sand & Gravel
No Water
No Mottles
No Ledge

TP 5
0"-6" Topsoil/Organics
6"-18" Brown Fine Sandy Loam
24"-64" Red-Brown Loose Sand & Gravel
No Water
No Mottles
No Ledge

This survey and map has been prepared in accordance with Sections 20-300b-1 thru 20-300b-20 of the Regulations of Connecticut State Agencies – "Minimum Standards for Surveys and Maps in the State of Connecticut" as endorsed by the Connecticut Association of Land Surveyors, Inc. It is a Property Survey based on a Resurvey conforming to Horizontal Class A-2 & a Topographic Survey conforming to Class T-2.

This document and copies thereof are valid only if they bear the live signature and embossed seal of the designated professional. Unauthorized alterations render any declaration hereon null and void.

TO THE BEST OF MY KNOWLEDGE AND BELIEF THIS MAP IS SUBSTANTIALLY CORRECT AS NOTED HEREON.

RUSSO
SURVEYORS·ENGINEERS
SERVING CT & MA
J.R. Russo & Associates, LLC
1 Sheham Rd East Windsor, CT 06088 · CT 860.623.0569 · MA 413.785.1158
www.jrrusso.com · info@jrrusso.com

Applicant
Vernon Development LLC
56 East Main Street
Avon, Connecticut 06001

DATE	REVISIONS
3-26-2022	TALCOTTVILLE RD ENTRANCE, APPLY VARIANCES
3-01-2022	SHIFT CONSTRUCTION ENTRANCE EAST
2-14-2022	WETLAND MITIGATION, LEAK-OFF, BASIN OUTLET

BY: LF/TAC CHK: JEU

The Learning Experience
Property Of
501 Talcottville Road, LLC
501 Talcottville Road
Vernon, Connecticut 06010
Parcel ID: 09-0007-0001D (Zone: C)

Grading & Erosion & Sediment Control Plan
(ALT 2)

DATE: 1-11-22
SCALE: 1"=20'
JOB NUMBER: 2021-083
SHEET: 4 of 12

S:\Acad\2021 Civil 3D\2021-083 Vernon Development - 501 Talcottville Rd\Russo Drawings\2021-083 B - Pushed forward.dwg

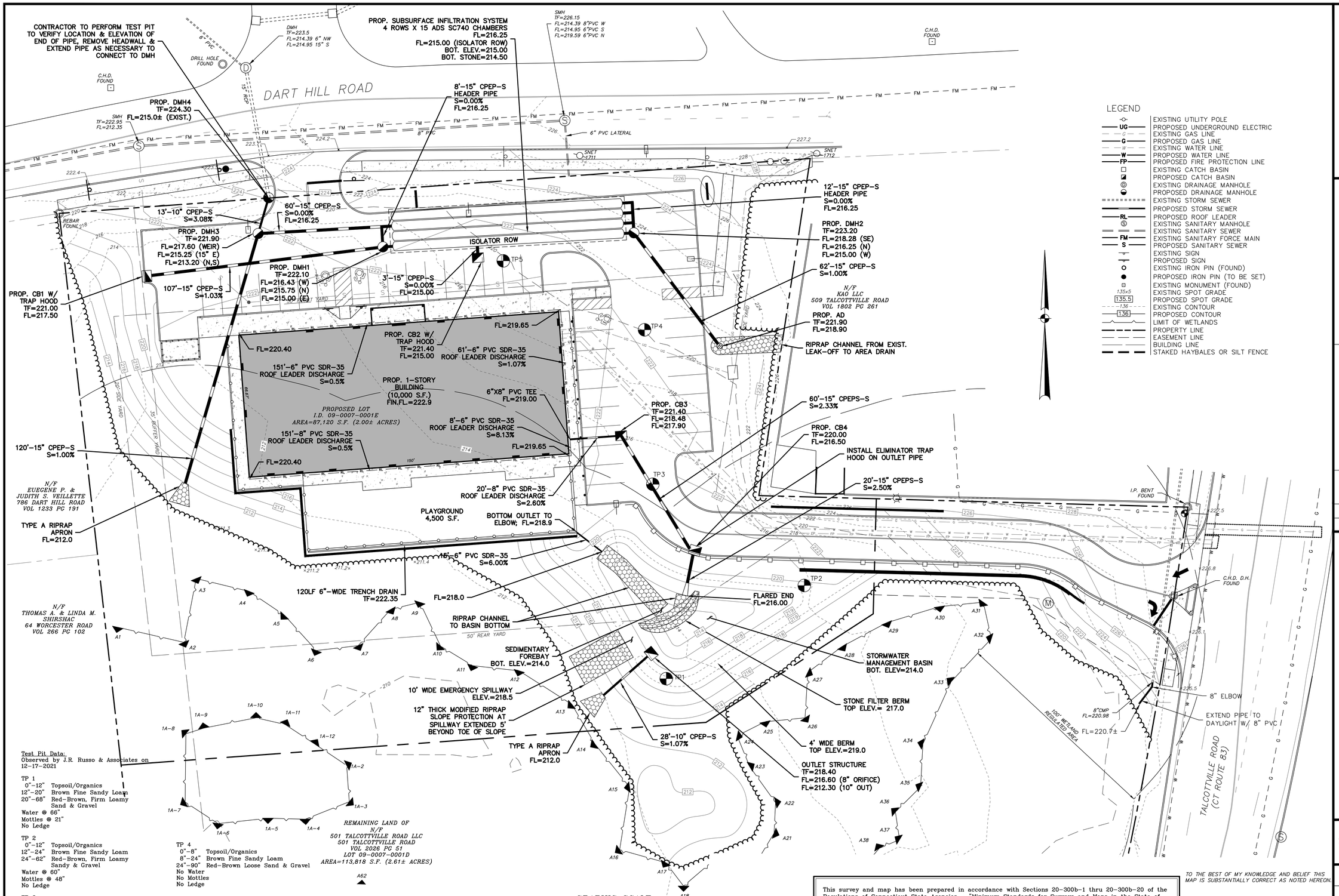

LEGEND

	EXISTING UTILITY POLE
UG	PROPOSED UNDERGROUND ELECTRIC
G	EXISTING GAS LINE
G	PROPOSED GAS LINE
W	EXISTING WATER LINE
W	PROPOSED WATER LINE
FP	PROPOSED FIRE PROTECTION LINE
	EXISTING CATCH BASIN
	PROPOSED CATCH BASIN
	EXISTING DRAINAGE MANHOLE
	PROPOSED DRAINAGE MANHOLE
	EXISTING STORM SEWER
	PROPOSED STORM SEWER
RL	PROPOSED ROOF LEADER
	EXISTING SANITARY MANHOLE
	EXISTING SANITARY SEWER
FM	EXISTING SANITARY FORCE MAIN
S	PROPOSED SANITARY SEWER
	EXISTING SIGN
	PROPOSED SIGN
	EXISTING IRON PIN (FOUND)
	PROPOSED IRON PIN (TO BE SET)
	EXISTING MONUMENT (FOUND)
135.5	EXISTING SPOT GRADE
135.5	PROPOSED SPOT GRADE
136	EXISTING CONTOUR
136	PROPOSED CONTOUR
	LIMIT OF WETLANDS
	PROPERTY LINE
	EASEMENT LINE
	BUILDING LINE
	STAKED HAYBALES OR SILT FENCE

Test Pit Data:
Observed by J.R. Russo & Associates on 12-17-2021

TP 1
0"-12" Topsoil/Organics
12"-20" Brown Fine Sandy Loam
20"-68" Red-Brown, Firm Loamy Sand & Gravel
Water @ 66"
Mottles @ 21"
No Ledge

TP 2
0"-12" Topsoil/Organics
12"-24" Brown Fine Sandy Loam
24"-62" Red-Brown, Firm Loamy Sandy & Gravel
Water @ 60"
Mottles @ 48"
No Ledge

TP 3
0"-12" Topsoil/Organics
12"-30" Brown Fine Sandy Loam
30"-64" Red-Brown, Firm Sand & Gravel
Water @ 60"
Mottles @ 40"
No Ledge

TP 4
0"-8" Topsoil/Organics
8"-24" Brown Fine Sandy Loam
24"-90" Red-Brown Loose Sand & Gravel
No Water
No Mottles
No Ledge

TP 5
0"-6" Topsoil/Organics
6"-18" Brown Fine Sandy Loam
24"-64" Red-Brown Loose Sand & Gravel
No Water
No Mottles
No Ledge

This survey and map has been prepared in accordance with Sections 20-300b-1 thru 20-300b-20 of the Regulations of Connecticut State Agencies – "Minimum Standards for Surveys and Maps in the State of Connecticut" as endorsed by the Connecticut Association of Land Surveyors, Inc. It is a Property Survey based on a Resurvey conforming to Horizontal Class A-2 & a Topographic Survey conforming to Class T-2.

This document and copies thereof are valid only if they bear the live signature and embossed seal of the designated professional. Unauthorized alterations render any declaration hereon null and void.

TO THE BEST OF MY KNOWLEDGE AND BELIEF THIS MAP IS SUBSTANTIALLY CORRECT AS NOTED HEREON.

RUSSO
SURVEYORS·ENGINEERS
SERVING CT & MA
J.R. Russo & Associates, LLC
1 Shoham Rd East Windsor, CT 06088 · CT 860.623.0569 · MA 413.785.1158
www.jrrusso.com · info@jrrusso.com

Applicant
Vernon Development LLC
56 East Main Street
Avon, Connecticut 06001

REVISIONS	
3-26-2022	TALCOTTVILLE RD ENTRANCE, APPLY VARIANCES
2-14-2022	WETLAND MITIGATION, LEAK-OFF, BASIN OUTLET

BY: LF/TAC | CHK: JEU

The Learning Experience
Property Of
501 Talcottville Road, LLC
501 Talcottville Road
Vernon, Connecticut 06010
Parcel ID: 09-0007-0001D (Zone: C)

Storm Sewer Plan
(ALT 2)

DATE
1-11-22

SCALE
1"=20'

JOB NUMBER
2021-083

SHEET
5 of 12

S:\Acad\2021 Civil 3D\2021-083 Vernon Development - 501 Talcottville Rd\Russo Drawings\2021-083 B - Pushed forward.dwg

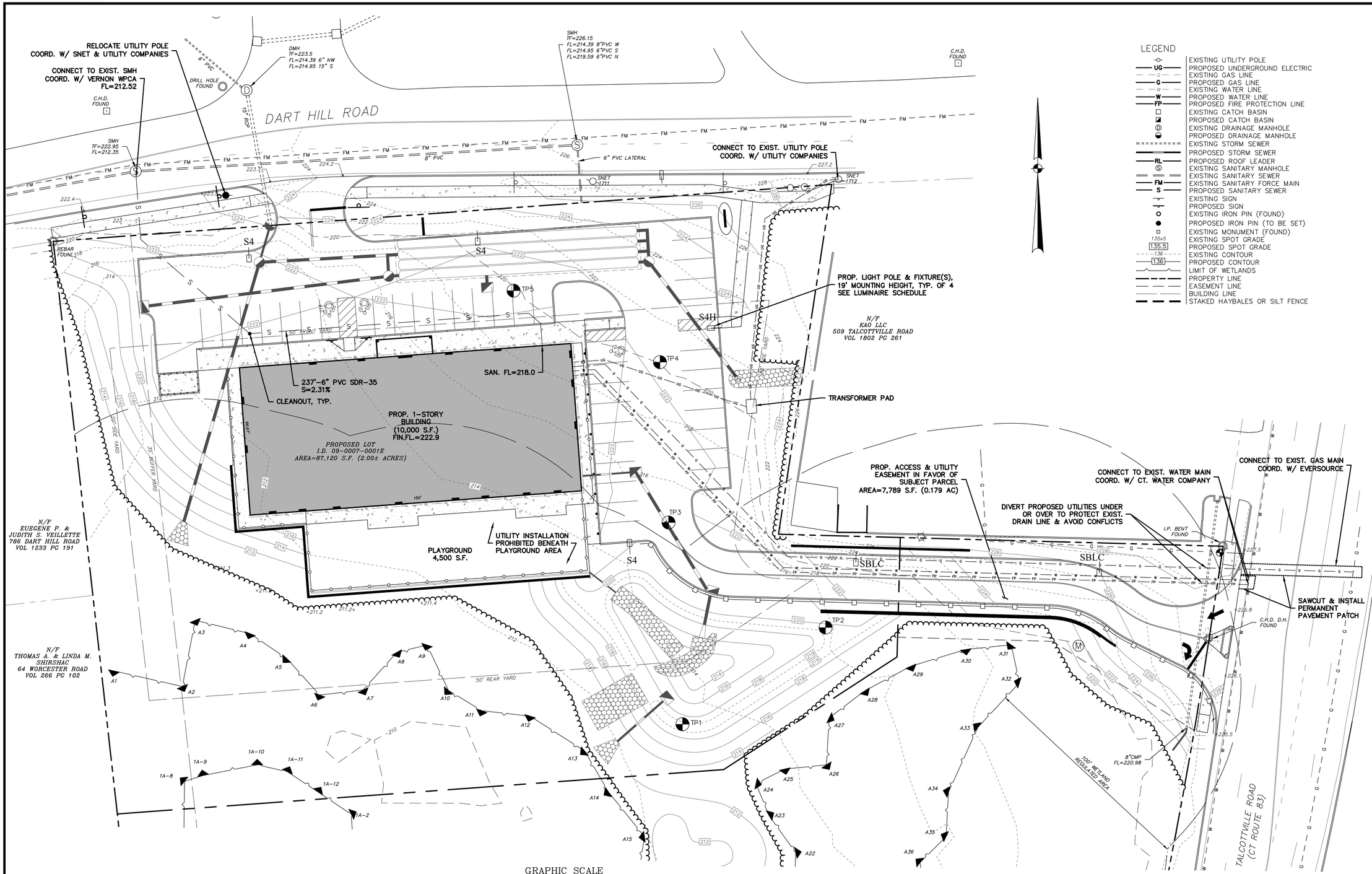

LEGEND

	EXISTING UTILITY POLE
UG	PROPOSED UNDERGROUND ELECTRIC
G	EXISTING GAS LINE
G	PROPOSED GAS LINE
W	EXISTING WATER LINE
W	PROPOSED WATER LINE
FP	PROPOSED FIRE PROTECTION LINE
	EXISTING CATCH BASIN
	PROPOSED CATCH BASIN
	EXISTING DRAINAGE MANHOLE
	PROPOSED DRAINAGE MANHOLE
	EXISTING STORM SEWER
	PROPOSED STORM SEWER
RL	PROPOSED ROOF LEADER
	EXISTING SANITARY MANHOLE
	EXISTING SANITARY SEWER
FM	EXISTING SANITARY FORCE MAIN
S	PROPOSED SANITARY SEWER
	EXISTING SIGN
	PROPOSED SIGN
	EXISTING IRON PIN (FOUND)
	PROPOSED IRON PIN (TO BE SET)
	EXISTING MONUMENT (FOUND)
135x5	EXISTING SPOT GRADE
135.5	PROPOSED SPOT GRADE
136	EXISTING CONTOUR
136	PROPOSED CONTOUR
	LIMIT OF WETLANDS
	PROPERTY LINE
	EASEMENT LINE
	BUILDING LINE
	STAKED HAYBALES OR SILT FENCE

GRAPHIC SCALE

20 0 10 20 40 80

(IN FEET)
1 inch = 20 ft.

Luminaire Schedule									
Symbol	Qty	Label	Arrangement	Luminaire Lumens	Luminaire Watts	LLF	BUG Rating	Mounting Height	Description
	3	S4	Single	12574	102	0.900	B2-U0-G3	19	Lithonia DSX1 LED P3 40K TFTM MVOLT SPA DBLXD - SSS 18 4C DM19A DBLXD 18FT POLE on 1FT BASE
	1	S4H	Single	11312	125	0.900	B2-U0-G2	19	Lithonia DSX1 LED P4 40K TFTM MVOLT SPA HS DBLXD - SSS 18 4C DM19AS DBLXD 18FT POLE on 1FT BASE
	2	SBLC	Single	7293	70	0.900	B1-U0-G2	19	Lithonia DSX1 LED P2 40K BLC MVOLT SPA DBLXD - SSS 18 4C DM19A DBLXD 18FT POLE on 1FT BASE

This survey and map has been prepared in accordance with Sections 20–300b–1 thru 20–300b–20 of the Regulations of Connecticut State Agencies – "Minimum Standards for Surveys and Maps in the State of Connecticut" as endorsed by the Connecticut Association of Land Surveyors, Inc. It is a Property Survey based on a Resurvey conforming to Horizontal Class A–2 & a Topographic Survey conforming to Class T–2.

This document and copies thereof are valid only if they bear the live signature and embossed seal of the designated professional. Unauthorized alterations render any declaration hereon null and void.

TO THE BEST OF MY KNOWLEDGE AND BELIEF THIS MAP IS SUBSTANTIALLY CORRECT AS NOTED HEREON.

RUSSO
SURVEYORS • ENGINEERS
SERVING CT & MA
J.R. Russo & Associates, LLC
1 Sheham Rd East Windsor, CT 06088 • CT 860.623.0569 • MA 413.785.1158
www.jrrusso.com • info@jrrusso.com

Applicant
Vernon Development LLC
56 East Main Street
Avon, Connecticut 06001

REVISIONS		
3-28-2022	SITE LIGHTING	
3-26-2022	TALCOTTVILLE RD ENTRANCE, APPLY VARIANCES	
2-14-2022	WETLAND MITIGATION, LEAK-OFF, BASIN OUTLET	

BY: LF/TAC CHK: JEU

The Learning Experience
Property Of
501 Talcottville Road, LLC
501 Talcottville Road
Vernon, Connecticut 06010
Parcel ID: 09-0007-0001D (Zone: C)

Utility Plan
(ALT 2)

DATE
1-11-22

SCALE
1"=20'

JOB NUMBER
2021-083

SHEET
6 of 12

S:\Acad\2021 Civil 3D\2021-083 Vernon Development - 501 Talcottville Rd\Russo Drawings\2021-083 B - Pushed forward.dwg

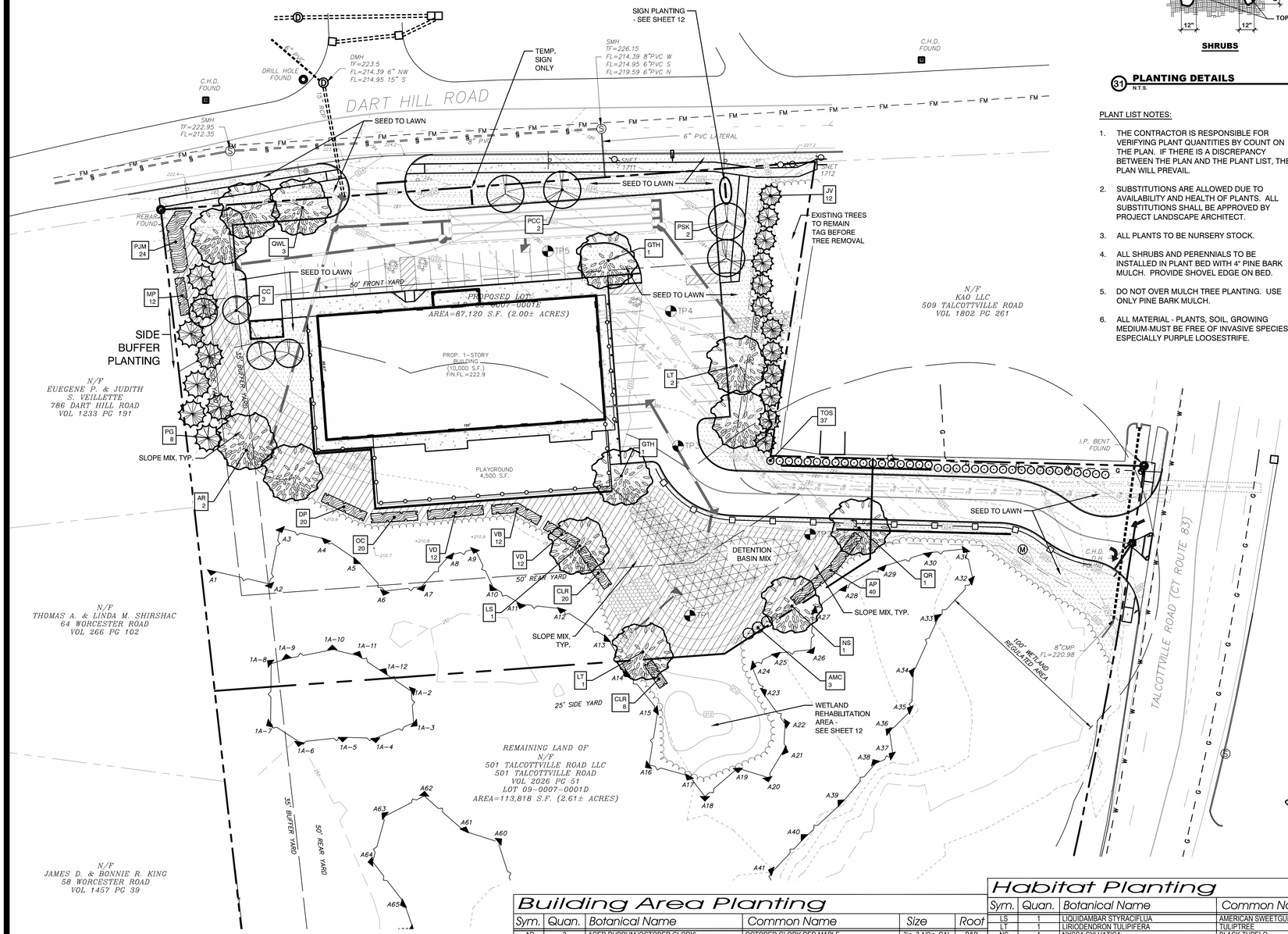

PLANTING NOTE

PLACE TOPSOIL MIXTURE IN BOTTOM OF HOLE AND SATURATE. AFTER PLACING PLANT, WORK TOPSOIL MIXTURE CAREFULLY AROUND ROOT BALL AND THEN SATURATE. WHEN HOLE IS ONE HALF FULL OF MIXTURE, SATURATE AGAIN. FILL HOLE COMPLETELY WITH TOPSOIL MIXTURE AND SATURATE AGAIN.

DECIDUOUS TREES WITH LESS THAN 2 1/2" CAL. AND EVERGREEN TREES LESS THAN 4' HT. SHALL BE STAKED WITH TWO EQUALLY SPACED STAKES AROUND THE TREE.

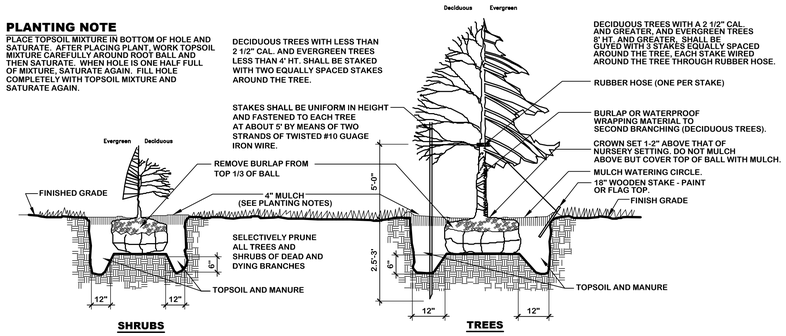

31 PLANTING DETAILS

N.T.S.

PLANT LIST NOTES:

1. THE CONTRACTOR IS RESPONSIBLE FOR VERIFYING PLANT QUANTITIES BY COUNT ON THE PLAN. IF THERE IS A DISCREPANCY BETWEEN THE PLAN AND THE PLANT LIST, THE PLAN WILL PREVAIL.
2. SUBSTITUTIONS ARE ALLOWED DUE TO AVAILABILITY AND HEALTH OF PLANTS. ALL SUBSTITUTIONS SHALL BE APPROVED BY PROJECT LANDSCAPE ARCHITECT.
3. ALL PLANTS TO BE NURSERY STOCK.
4. ALL SHRUBS AND PERENNIALS TO BE INSTALLED IN PLANT BED WITH 4" PINE BARK MULCH. PROVIDE SHOVEL EDGE ON BED.
5. DO NOT OVER MULCH TREE PLANTING. USE ONLY PINE BARK MULCH.
6. ALL MATERIAL - PLANTS, SOIL, GROWING MEDIUM-MUST BE FREE OF INVASIVE SPECIES - ESPECIALLY PURPLE LOOSESTRIFE.

SEEDING OPERATIONS

A. FERTILIZER AND LIMESTONE

CONTRACTOR SHALL CONDUCT APPROPRIATE SOIL TESTS TO DETERMINE AMOUNT OF FERTILIZER AND LIMESTONE REQUIRED TO ENSURE AN ACCEPTABLE LAWN.

GROUND LIMESTONE: 100LBS/1000S.F.
COMMERCIAL FERTILIZER: * 20LBS/1000S.F.

*PERCENTAGES OF NITROGEN, PHOSPHORIC ACID AND POTASH TO BE DETERMINED BY SOIL TESTS.

B. LAWN SEED

SEED MIXTURE FOR: LATE SUMMER / EARLY FALL / EARLY SPRING PLANTING. SOW AT RATE OF 4 LBS/1000 S.F.

CREEPING RED FESCUE	35 PARTS
CHEWINGS RED FESCUE	20 PARTS
KENTUCKY 31 TALL FESCUE	15 PARTS
ROUGH BLUEGRASS	10 PARTS
BARON BLUEGRASS	20 PARTS

SEED MIXTURE FOR PLANTING MAY 1 TO LATE SUMMER. SOW AT A RATE OF 6 LBS/1000 S.F.

CREEPING RED FESCUE	35 PARTS
CHEWINGS RED FESCUE	20 PARTS
KENTUCKY 31 TALL FESCUE	20 PARTS
DOMESTIC RYEGRASS	25 PARTS

C. SLOPE MIX

SOW AT RATE OF 6 LBS/1000 S.F.

CREEPING RED FESCUE	42 PARTS
FIESTA II PERENNIAL RYEGRASS	34 PARTS
RED TOP	8 PARTS
ALSIKE CLOVER	8 PARTS
BIRDSFOOT TREFOIL	8 PARTS

D. DETENTION BASIN MIX

USE "RETENTION BASIN FLOOR SEED" FROM NEW ENGLAND SEED CO. AT A RATE OF 2LB./1000 S.F.
MIX WITH ANNUAL RYEGRASS AT A RATE OF 1/2LB./1000 S.F.

E. MEADOW MIX

USE NEW ENGLAND SEED CO. "NEW ENGLAND HORSE PASTURE MIXTURE" AT A RATE OF 100 LB./ACRE. MIX WITH VERMONT WILDFLOWER FARM [(802) 425-3500] DROUGHT TOLERANT PERENNIAL MIX AT A RATE OF 51 LB./ACRE. MIX WITH 20% ADDITIONAL COMMON TALL FESCUE.

33 SEEDING OPERATIONS & MIXES

N.T.S.

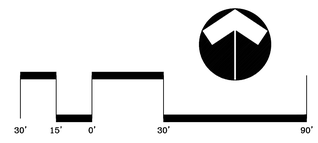

SCALE: 1" = 30'

LEGEND

- PROPERTY LINE
- WETLAND LINE
- 100' UPLAND REVIEW AREA
- PROPOSED DECIDUOUS TREE
- PROPOSED FLOWERING TREE
- PROPOSED EVERGREEN TREE
- PROPOSED SHRUB
- ZZ — PLANT LABEL & COUNT
- EXISTING TREELINE
- DETENTION BASIN MIX
- LAWN SEED MIX
- SLOPE MIX
- MEADOW MIX

STATE OF CONNECTICUT — MERI-ANN P. KING — NO. 593 — LICENSED LANDSCAPE ARCHITECT

Side Buffer Planting

Sym.	Quan.	Botanical Name	Common Name	Size	Root
PG	8	PICEA GLAUCA	WHITE SPRUCE	5ft.-6ft. Ht.	B&B
MP	12	MYRICA PENSYLVANICA	NORTHERN BAYBERRY	24in.-30in. Ht.	CONT.
PJM	24	RHODODENDRON 'PJM'	PJM RHODODENDRON	24in.-30in. Ht.	CONT.

Building Area Planting

Sym.	Quan.	Botanical Name	Common Name	Size	Root
AR	2	ACER RUBRUM 'OCTOBER GLORY'	OCTOBER GLORY RED MAPLE	3in.-3 1/2in. CAL	B&B
CC	3	CERCIS CANADENSIS	EASTERN REDBUD	2in-2 1/2in. CAL	B&B
GTH	2	GLEDITSIA TRIACANTHOS 'SHADEMASTER'	SHADEMASTER HONEYLOCUST	3in.-3 1/2in. CAL	B&B
JV	12	JUNIPERUS VIRGINIANA 'EMERALD SENTINEL'	EMERALD SENTINEL EASTERN RED-CEDAR	5ft.-6ft. Ht.	B&B
LT	2	LIRIODENDRON TULIPIFERA	TULIPTREE	3in.-3 1/2in. CAL	B&B
PCC	2	PYRUS CALLERYANA 'CHANTICLEER'	ORNAMENTAL PEAR	3in.-3 1/2in. CAL	B&B
PSK	2	PRUNUS SERRULATA 'KWANZAN'	KWANZAN CHERRY	3in.-3 1/2in. CAL	B&B
TOS	37	THUJA OCCIDENTALIS 'NIGRA'	DARK AMERICAN ARBORVITAE	4ft.-5ft. Ht.	B&B
QWL	3	QUERCUS X WAREI 'LONG'	REGAL PRINCE OAK - FASTIGIATE FORM	3in.-3 1/2in. CAL	B&B

Habitat Planting

Sym.	Quan.	Botanical Name	Common Name	Size	Root
LS	1	LIQUIDAMBAR STYRACIFLUA	AMERICAN SWEETGUM	3in.-3 1/2in. CAL	B&B
LT	1	LIRIODENDRON TULIPIFERA	TULIPTREE	3in.-3 1/2in. CAL	B&B
NS	1	NYSSA SYLVATICA	BLACK TUPELO	3in.-3 1/2in. CAL	B&B
QR	1	QUERCUS RUBRA	RED OAK	2in.-2 1/2in. CAL	B&B
AMC	3	AMELANCHIER CANADENSIS	SHADBLOW SERVICEBERRY - MULTISTEM SHRUB FORM	4ft.-5ft.	CONT.
CLR	26	CLETHRA ALNIFOLIA 'RUBY SPICE'	RUBY SPICE SUMMERSWEET	24in.-30in. Ht.	CONT.
VB	12	VIBURNUM X BURKWOODII	BURKWOOD VIBURNUM	24in.-30in. Ht.	CONT.
VD	24	VIBURNUM DENTATUM	ARROWWOOD VIBURNUM	24in.-30in. Ht.	CONT.
AP	40	ADIANTUM PEDATUM	MAIDENHAIR FERN		CONT.
DP	20	DENNSTAEDTIA PUNCTILOBULA	HAY SCENTED FERN		CONT.
OC	20	OSMUNDA CINNAMOMEA	CINNAMON FERN		CONT.

RUSSO SURVEYORS • ENGINEERS SERVING CT & MA
J.R. Russo, & Associates, LLC
1 Shoham Rd East, Windsor, CT 06095 • CT 860.623.2569 • MA 413.785.1858
www.jrrusso.com • info@jrrusso.com

LADA, P.C. Land Planners
104 West Street, Simsbury, CT 06070 (860) 651-4971
Brewster, NY 10509 (845) 278-7424
Email: lada@lada-planners.com

REVISIONS

BY: DFM | CHK: TPH

The Learning Experience
Property Of
501 Talcottville Road, LLC
501 Talcottville Road
Vernon, Connecticut 06010
Parcel ID: 09-0007-0001D (Zone: C)

Planting Plan

DATE: 04-06-2022
SCALE: 1"=30'
JOB NUMBER: 2021-083
SHEET: 7 of 12

PERMANENT SEEDING (PS)

SPECIFICATIONS

Time Of Year

Seeding dates in Connecticut are normally April 1 through June 15 and August 15 through October 1. Spring seedings give the best results and spring seedings of all mixes with legumes is recommended. There are two exceptions to the above dates. The first exception is when seedings will be made in the areas of Connecticut known as the Coastal Slope and the Connecticut River Valley. The Coastal Slope includes the coastal towns of New London, Middlesex, New Haven, and Fairfield counties. In these areas, with the exception of crown vetch (when crown vetch is seeded in late summer, at least 35% of the seed should be hard seed (unscarified), the final fall seeding dates can be extended and additional 15 days. The second exception is frost crack or dormant seeding, the seed is applied during the time of year when no germination can be expected, normally November through February. Germination will take place when weather conditions improve, mulching is extremely important to protect the seed from wind and surface erosion and to provide erosion protection until the seeding becomes established.

Site Preparation

Grade in accordance with the Land Grading measure which is in the Connecticut Guidelines For Soil Erosion and Sediment Control latest edition.

Install all necessary surface water controls.

For areas to be mowed remove all surface stones 2 inches or larger. Remove all other debris such as wire, cable tree roots, pieces of concrete, clods, lumps, or other unsuitable material.

Seed Selection

Lawn Areas: Premium Seed Mix for Sun and Shade.
Stormwater Basin: New England Erosion Control/Restoration Mix by New England Wetland Plants, Inc. or approved equal.

Seedbed Preparation

Apply topsoil, if necessary, in accordance with the Topsoiling measure which is in the Connecticut Guidelines For Soil Erosion and Sediment Control latest edition.

Apply ground limestone and fertilizer according to soil test recommendations (such as those offered by the University of Connecticut Soil Testing Laboratory or other reliable source).

Where soil testing is not feasible on small or variable sites, or where timing is critical, fertilizer may be applied at the rate of 300 pounds per acre or 7.5 pounds per 1,000 square feet of 10–10–10 or equivalent and limestone at 4 tons per acre or 200 pounds per 1,000 square feet.

Work lime and fertilizer into the soil to a depth of 3 to 4 inches with a disc or other suitable equipment.

Inspect seedbed just before seeding. If the soil is compacted, crusted or hardened, scarify the area prior to seeding.

Seed Application

Apply selected seed at rates per manufacturer's recommendations uniformly by hand, cyclone seeder, drill, cultipacker type seeder or hydroseeder (slurry including seed, fertilizer). Normal seeding depth is from 0.25 to 0.5 inch. Increase seeding rates by 10% when hydroseeding or frost crack seeding. Seed warm season grasses during the spring period only.

Mulching

See guidelines in the Mulch For Seed measures.

MAINTENANCE

Inspect temporary soil protection area at least once a week and within 24 hours of the end of a storm with a rainfall amount of 0.5 inch or greater during the first growing season.

Where seed has been moved or where soil erosion has occurred, determine the cause of the failure and repair as needed.

TEMPORARY SEEDING (TS)

SPECIFICATIONS

Site Preparation

Install needed erosion control measures such as diversions, grade stabilization structures, sedimentation basins and grassed waterways in accordance with the approved plan.

Grade according to plans and allow for the use of appropriate equipment for seedbed preparation, seeding, mulch application and mulch anchoring.

Seedbed Preparation

Loosen the soil to a depth of 3–4 inches with a slightly roughened surface. If the area has been recently loosened or disturbed, no further roughening is required. Soil preparation can be accomplished by tracking with a bulldozer, discing harrowing, raking or dragging with a section of chain link fence.

Apply ground limestone and fertilizer according to soil test recommendations (such as those offered by the University of Connecticut Soil Testing Laboratory or other reliable source).

If soil testing is not feasible on small or variable sites, or where timing is critical, fertilizer may be applied at the rate of 300 pounds per acre or 7.5 pounds per 1,000 square feet of 10–10–10 or equivalent.

Seeding

Apply seed uniformly by hand, cyclone seeder, drill, cultipacker type seeder or hydroseeder. The temporary seed shall be Rye (grain) applied at a rate of 120 pounds per acre. Increase seeding rates by 10% when hydroseeding.

Mulching

See guidelines in the Mulch For Seed measures.

MAINTENANCE

Inspect temporary seeding area at least once a week and within 24 hours of the end of a storm with a rainfall amount of 0.5 inch or greater for seed and mulch movement and rill erosion.

Where seed has been moved or where soil erosion has occurred, determine the cause of the failure and repair as needed.

MULCH FOR SEED (MS)

SPECIFICATIONS

Materials

Types of Mulches *within this specification include, but are not limited to:*

1. Hay: *The dried stems and leafy parts of plants cut and harvested, such as alfalfa, clovers, other forage legumes and the finer stemmed, leafy grasses. The average stem length should not be less than 4 inches. Hay that can be windblown should be anchored to hold it in place.*

2. Straw: *Cut and dried stems of herbaceous plants, such as wheat, barley, cereal rye, or brome. The average stem length should not be less than 4 inches. Straw that can be windblown should be anchored to hold it in place.*

3. Cellulose Fiber: *Fiber origin is either virgin wood, post–industrial/pre–consumer wood or post consumer wood complying with materials specification (collectively referred to as "wood fiber"), newspaper, kraft paper, cardboard (collectively referred to as "paper fiber") or a combination of wood and paper fiber. Paper fiber, in particular, shall not contain boron, which inhibits seed germination. The cellulose fiber must be manufactured in such a manner that after the addition to and agitation in slurry tanks with water, the fibers in the slurry become uniformly suspended to form a homogeneous product. Subsequent to hydraulic spraying on the ground, the mulch shall allow for the absorption and percolation of moisture and shall not form a tough crust such that it interferes with seed germination or growth. Generally applied with tackifier and fertilizer. Refer to manufacturer's specifications for application rates needed to attain 80%–95% coverage without interfering with seed germination or plant growth. Not recommended as a mulch for use when seeding occurs outside of the recommended seeding dates.*

Tackifiers *within this specification include, but are not limited to: Water soluble materials that cause mulch particles to adhere to one another, generally consisting of either a natural vegetable gum blended with gelling and hardening agents or a blend of hydrophilic polymers, resins, viscosifiers, sticking aids and gums. Good for areas intended to be mowed. Cellulose fiber mulch may be applied as a tackifier to other mulches, provided the application is sufficient to cause the other mulches to adhere to one another.* ***Emulsified asphalts are specifically prohibited for use as tackifiers due to their potential for causing water pollution following its application.***

Nettings *within this specification include, but are not limited to: Prefabricated openwork fabrics made of cellulose cords, ropes, threads, or biodegradable synthetic material that is woven, knotted or molded in such a manner that it holds mulch in place until vegetation growth is sufficient to stabilize the soil. Generally used in areas where no mowing is planned.*

Site Preparation

Grade according to plans and allow for the use of appropriate equipment for seedbed preparation, seeding, mulch application and mulch anchoring.

Application

Timing: *Applied immediately following seeding. Some cellulose fiber may be applied with seed to assist in marking where seed has been sprayed, but expect to apply a second application of cellulose fiber to meet the requirements of* ***Mulch For Seed*** *in the Connecticut Guidelines For Soil Erosion and Sediment Control latest edition.*

Spreading: *Mulch material shall be spread uniformly by hand or machine resulting in 80%–95% coverage of the disturbed soil when seeding within the recommended seeding dates. Applications that are uneven can result in excessive mulch smothering the germinating seeds. For hay or straw anticipate an application rate of 2 tons per acre. For cellulose fiber follow manufacture's recommended application rates to provided 80%–95% coverage.*

When seeding outside the recommended seeding dates, increase mulch application rate to provide between 95%–100% coverage of the disturbed soil. For hay or straw anticipate an application rate to 2.5 to 3 tons per acre.

When spreading hay mulch by hand, divide the area to be mulched into approximately 1,000 square feet and place 1.5–2 bales of hay in each section to facilitate uniform distribution.

For cellulose fiber mulch, expect several spray passes to attain adequate coverage, to eliminate shadowing, and to avoid slippage.

Anchoring: *Expect the need for mulch anchoring along the shoulders of actively traveled roads, hill tops and long open slopes not protected by wind breaks.*

When using netting, the most critical aspect is to ensure that the netting maintains substantial contact with the underlying mulch and the mulch, in turn, maintains continuos contact with the soil surface. Without such contact, the material is useless and erosion can be expected to occur.

MAINTENANCE

Inspect mulch for seed area at least once a week and within 24 hours of the end of a storm with a rainfall amount of 0.5 inch or greater until the grass has germinated to determine maintenance needs.

Where mulch has been moved or where soil erosion has occurred, determine the cause of the failure and repair as needed.

SOIL ERSOION & SEDIMENT CONTROL NOTES

1. *The contractor/developer shall notify the Town Staff prior to construction in accordance with the local approvals and permits.*
2. *All soil erosion and sediment control work shall be done in strict accordance with the Connecticut Guidelines For Soil Erosion and Sediment Control latest edition.*
3. *Any additional erosion/sediment control deemed necessary by the engineer during construction, shall be installed by the developer. In addition, the developer shall be responsible for the repair/replacement and/or maintenance of all erosion control measures until all disturbed areas are stabilized to the satisfaction of the town staff.*
4. *All soil erosion and sediment control operations shall be in place prior to any grading operations and installation of proposed structures or utilities and shall be left in place until construction is completed and/or area is stabilized.*
5. *In all areas, removal of trees, bushes and other vegetation as well as disturbance of the soil is to be kept to an absolute minimum while allowing proper development of the site. During construction, expose as small an area of soil as possible for as short a time as possible.*
6. *The developer shall practice effective dust control per the soil conservation service handbook during construction and until all areas are stabilized or surface treated. The developer shall be responsible for the cleaning of nearby streets of any debris from these construction activities.*
7. *All fill areas shall be compacted sufficiently for their intended purpose and as required to reduce slipping, erosion or excess saturation. Fill intended to support buildings, structures, conduits, etc., shall be compacted in accordance with local requirements or codes.*
8. *Topsoil is to be stripped and stockpiled in amounts necessary to complete finished grading of all exposed areas requiring topsoil. The stockpiled topsoil is to be located as designated on the plans. Topsoil shall not be placed while in a frozen or muddy condition, when the subgrade is excessively wet, or in a condition that may otherwise be detrimental to proper grading or proposed sodding or seeding.*
9. *Any and all fill material is to be free of brush, rubbish, timber, logs vegetative matter and stumps in amounts that will be detrimental to constructing stable fills. Maximum side slopes of exposed surfaces of earth to be 3:1 or as otherwise specified by local authorities.*
10. *Soil stabilization should be completed within 5 days of clearing or inactivity in construction.*
11. *Waste Materials – All waste materials (including wastewater) shall be disposed of in accordance with local, state and federal law. Litter shall be picked up at the end of each work day.*
12. *The Contractor shall maintain on–site additional erosion control materials as a contingency in the event of a failure or when required to shore up existing BMPs. At a minimum, the on–site contingency materials should include 30 feet of silt fence and 5 straw haybales with 10 stakes.*

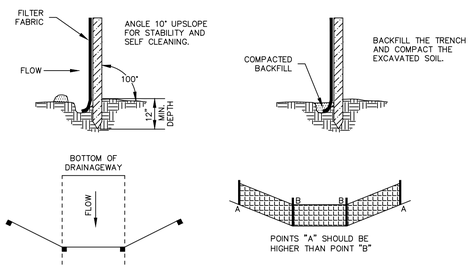

SOURCE: U.S. DEPARTMENT OF AGRICULTURE, SOIL CONSERVATION SERVICE, STORRS, CONNECTICUT

GEOTEXTILE SILT FENCE (GSF)

NOT TO SCALE

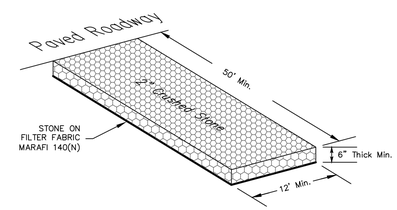

ANTI-TRACKING EXIT PAD DETAIL (CE)

NOT TO SCALE

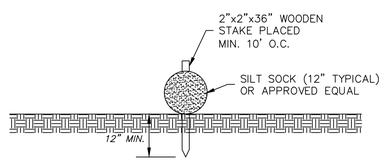

NOTE: MAY BE USED AS ALTERNATIVE TO GEOTEXTILE SILT FENCE.

PERIMETER SEDIMENT BARRIER

NOT TO SCALE

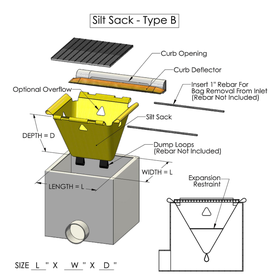

2831 Cardwell Road
Richmond, VA 23234
WWW.ACFENVIRONMENTAL.COM

NOTE:
SILT SACK SHALL BE SIZED TO FIT EACH INLET GRATE (SINGLE OR DOUBLE) AND SHALL BE CLEANED AND MAINTAINED UNTIL THE CONTRIBUTING WATERSHED IS STABILIZED WITH VEGETATION AND/OR COMPACTED PROCESSED STONE BASE.

CB GRATE INLET PROTECTION (SILT SACK)

NOT TO SCALE

CHECKLIST FOR EROSION CONTROL PLAN

PROJECT: The Learning Experience Academy of Education

LOCATION: 501 Talcottville Road, Vernon, CT

PROJECT DESCRIPTION: Construction of a Daycare Facility

PARCEL AREA: 2.0 acres

RESPONSIBLE PERSONNEL: Eric Spungin (860) 989–9494

EROSION AND SEDIMENT CONTROL PLAN PREPARER: J.R. Russo & Associates, LLC

CHECKLIST:

Work Description Erosion & Sediment Control Measures	Location	Date Installed	Initials	Date Removed	Initials
Install construction entrance	As shown on plan.				
Install perimeter sediment barriers	As shown on plan.				
Install inlet protection at CBs	As installed				

MAINTENANCE OF MEASURES:

Location	Description or Number	Date	Initials

Project Dates:

Date of groundbreaking for project:

Date of final stabilization:

PROJECT NARRATIVE AND CONSTRUCTION SEQUENCE

This project is located at 501 Talcottville Road in Vernon, Connecticut. The proposed activity is the construction of a 10,000 square foot daycare facility. The suggested schedule of construction is as follows:

1. Install construction anti–tracking pad (CE).
2. Install sediment barriers (GSF) at project perimeters.
3. Strip topsoil. Stockpile suitable amount of topsoil for reuse on–site in areas shown. Stockpiles shall be surrounded by sediment barriers (GSF).
4. Install retaining walls. Place and compact fill to establish subgrades coincident with retaining wall construction.
5. Begin building construction.
6. Construction stormwater management basin, excavate wetland creation area, and install drainage. Seed basin and wetland creation areas as soon as practicable.
7. Install other site utilities.
8. Install parking lot and driveway base.
9. Install concrete sidewalks and dumpster pad.
10. Pave binder course.
11. Stabilize remaining areas to receive topsoil and permanently seed as soon as possible.
12. Install landscaping & wetland enhancement plantings.
13. Install pavement top course in all areas. Sweep binder course and apply tack coat prior to placing pavement top course.
14. Apply paint striping.
15. Remove sediment barriers after site is fully stabilized.

Construction of this site is anticipated to begin in the spring of 2022 and be complete by January 2023, pending approvals. Temporary erosion control measures shall be installed prior to any soil disturbance and maintained throughout construction until soils have been stabilized with permanent vegetation.

The Contractor shall keep the area of disturbance to a minimum and establish vegetative cover on exposed soils as soon as practical. All soil and erosion control measures shall be installed and maintained in accordance with these plans and the "Connecticut DEP Guidelines for Soil Erosion and Sediment Control", as amended. The Contractor shall verify all conditions noted on the plans and shall immediately notify the Engineer of any discrepancies.

The developer shall be responsible for the repair/replacement/maintenance of all erosion control measures until all disturbed areas are stabilized. Accumulated sediment shall be removed as required to keep silt fence functional. In all cases, deposits shall be removed when the accumulated sediment has reached one–half above the ground height of the silt fence. This material is to be spread and stabilized in areas not subject to erosion, or to be used in areas which are not to be paved or built on. Silt fence (GSF) is to be replaced as necessary to maintain proper filtering action. Silt fence (GSF) are to remain in place and shall be maintained to insure efficient sediment capture until all areas above the erosion checks are stabilized and vegetation has been established.

POST CONSTRUCTION MAINTENANCE NOTES:

The property owner shall be responsible for performing the following post construction maintenance schedule:

1. Maintain lawn & landscape areas with minimal pesticides.
2. Sweep parking lot and paved areas at least once per year in the spring.
3. Inspect catch basins and storm manholes at least twice per year, including after sweeping. Clean at least once per year in April and as necessary to prevent the discharge of pollutants from structures. Remove accumulated oil, trash and excessive sediment with vac–truck. Check condition of hoods (if applicable).
4. Inspect infiltration basin annually for evidence of hydrocarbons and remove by vac–truck. Repair eroded areas and replace riprap and vegetation as required. Dredge bottom of forebay to remove accumulated sediment every 10 years or when significant volume reduction is observed. Mow infiltration basin on a regular basis to maintain as lawn area for filtering of pollutants. Inspect inlet pipes monthly and remove trash and debris as needed.

RUSSO
SURVEYORS • ENGINEERS
SERVING CT & MA
J.R. Russo & Associates, LLC
1 Shoreham Rd East Windsor, CT 06088 • CT 8606331569 • MA 4437851158
www.jrrusso.com • info@jrrusso.com

Applicant
Vernon Development LLC
56 East Main Street
Avon, Connecticut 06001

REVISIONS	
3–26–2022	TALCOTTVILLE RD ENTRANCE, APPLY VARIANCES
2–14–2022	PAGE NUMBERS

BY: LF/TAC CHK: JEU

The Learning Experience
Property Of
501 Talcottville Road, LLC
501 Talcottville Road
Vernon, Connecticut 06010
Parcel ID: 09–0007–0001D (Zone: C)

Erosion & Sediment Control Notes
(ALT 2)

DATE
1–11–22

SCALE
1"=20'

JOB NUMBER
2021–083

SHEET
8 of 12

S:\Acad\2021 Civil 3D\2021-083 Vernon Development - 501 Talcottville Rd\Russo Drawings\2021-083 B - Pushed forward.dwg

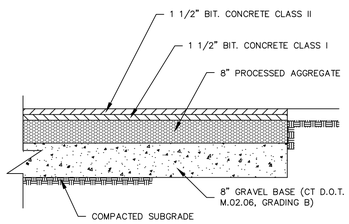

NOTE: WHERE SUBGRADES ARE ON WET SILT OR CLAY, CONTRACTOR TO INSTALL ADDITIONAL 12" OF ¾" CRUSHED STONE ON TENSAR TRIAX GEOGRID BELOW GRAVEL SUBBASE.

PAVEMENT DETAIL

NOT TO SCALE

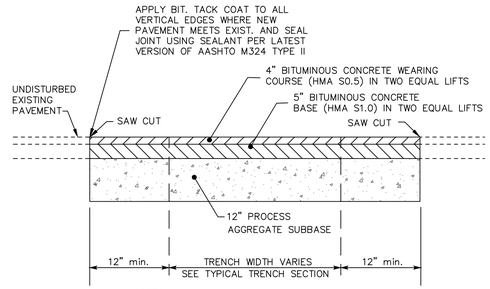

NOTES:
1. All saw cut and sealed joints to be wither parallel with, or perpendicular to, the center-line of the pipe.
2. All materials are to meet Conn. D.O.T. Form 817, latest edition.
3. Pavement materials shall be provided by the same vendor.

PERMANENT PAVEMENT PATCH (STATE HIGHWAY)

NOT TO SCALE

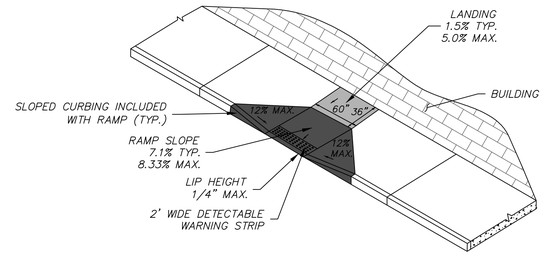

SIDEWALK RAMP (TYPE A)

NOT TO SCALE

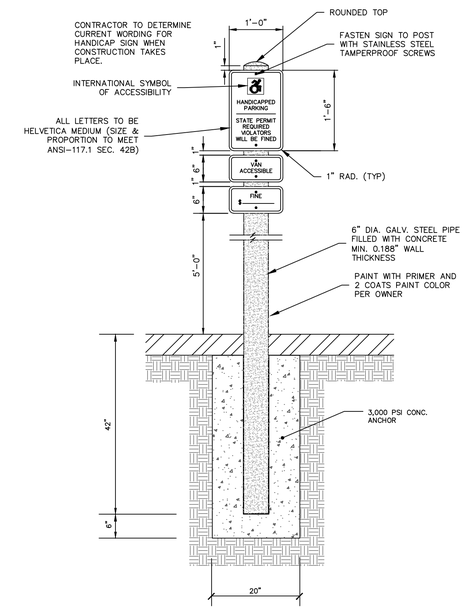

HANDICAP SIGN & BOLLARD

NOT TO SCALE

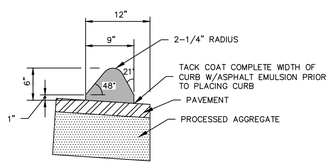

BITUMINOUS CONCRETE LIP CURBING

NOT TO SCALE

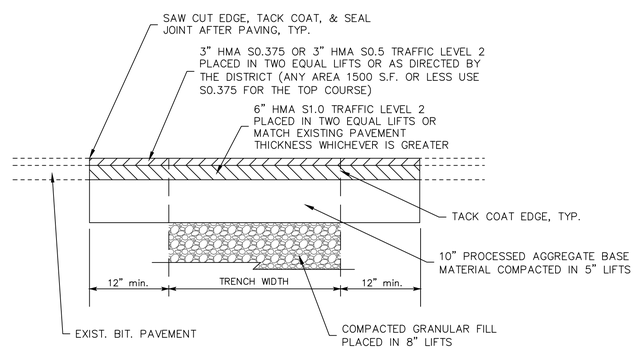

PERMANENT PAVEMENT PATCH (STATE HIGHWAY)

NOT TO SCALE

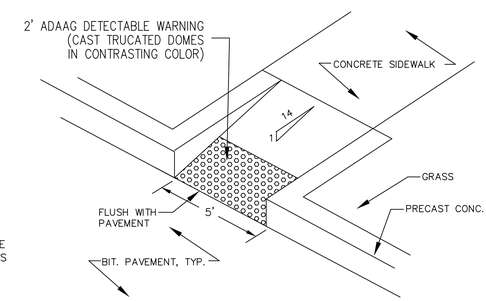

SIDEWALK RAMP (TYPE B)

NOT TO SCALE

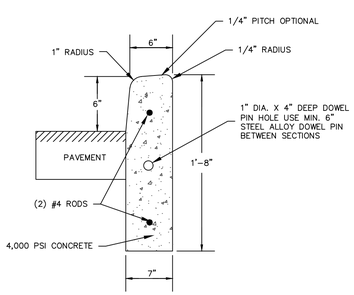

NOTE:
1. SPACE JOINTS 10'±, BUT NO LESS THAN 6'.

PRE-CAST CONCRETE CURB

NOT TO SCALE

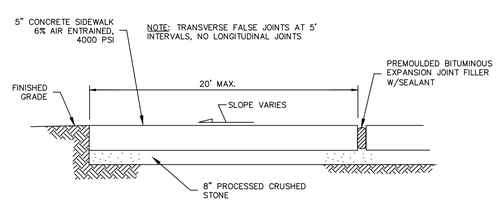

NOTE: EXPANSION JOINTS TO BE PLACED BETWEEN ADJACENT SLABS, AT BUILDING LINE, AT CURBS, OR AT PENETRATING STRUCTURES.

TYPICAL SIDEWALK DETAIL

NOT TO SCALE

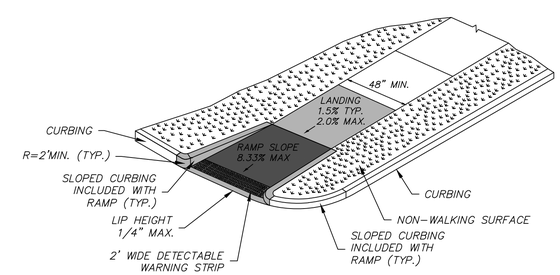

SINGLE DIRECTION – RETURN CURB WITH NON-WALKING SURFACE

DOT SIDEWALK RAMP (TYPE 16)

NOT TO SCALE

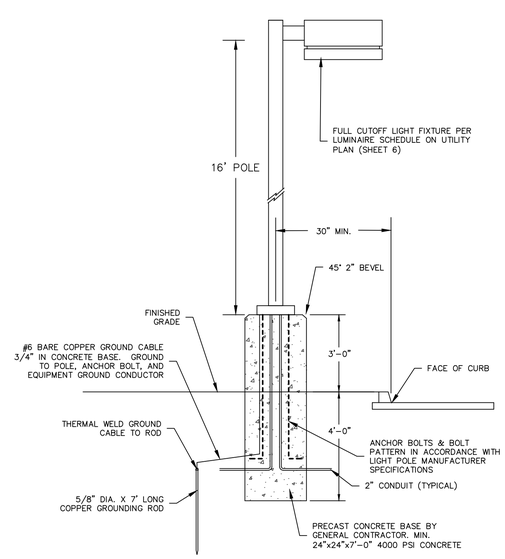

POLE MOUNTED EXTERIOR LIGHT

NOT TO SCALE

RUSSO
SURVEYORS • ENGINEERS
SERVING CT & MA
J.R. Russo & Associates, LLC
1 Shoham Rd East, Windsor, CT 06095 • CT: 860.602.0369 • MA: 413.785.1158
www.jrrussoconn.com • info@jrrussoconn.com

Applicant
Vernon Development LLC
56 East Main Street
Avon, Connecticut 06001

REVISIONS	
3-26-2022	TALCOTTVILLE RD ENTRANCE, APPLY VARIANCES
2-14-2022	PAGE NUMBERS

BY: LF/TAC | CHK: JEU

The Learning Experience
Property Of
501 Talcottville Road, LLC
501 Talcottville Road
Vernon, Connecticut 06010
Parcel ID: 09-0007-0001D (Zone: C)

Details
(ALT 2)

DATE: 1-11-22
SCALE: 1"=20'
JOB NUMBER: 2021-083
SHEET: 9 of 12

S:\Acad\2021 Civil 3D\2021-083 Vernon Development - 501 Talcottville Rd\Russo Drawings\2021-083 B - Pushed forward.dwg

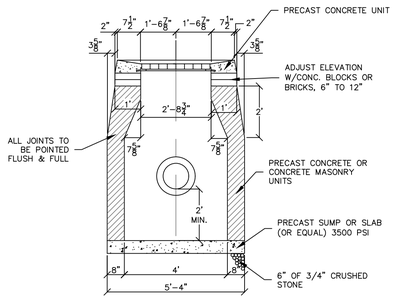

FRONT ELEVATION

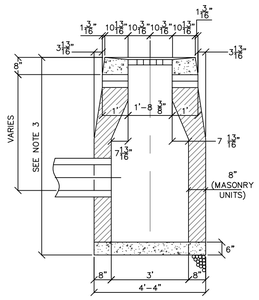

SIDE ELEVATION

NOTES:
1. MINIMUM COVER OVER TOP OF PIPE SHALL BE 1'-0".
2. WALL THICKNESS SHALL BE SUFFICIENT TO MEET HS 20 LOADING.
3. WALL THICKNESS FOR STRUCTURES OVER 10' HIGH IS 12" FOR CONCRETE BLOCK UNITS, INSIDE DIMENSIONS REMAIN THE SAME.
4. ALL PIPES SHALL BE CUT FLUSH WITH INSIDE WALLS.
5. ALL BRICKS SHALL BE CONCRETE.

TYPE "CL" CATCH BASIN

NOT TO SCALE

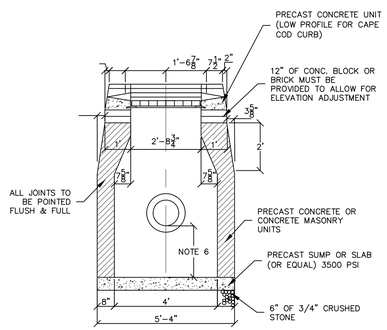

FRONT ELEVATION

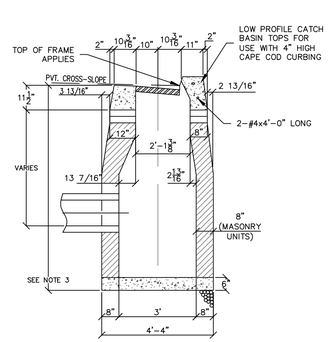

SIDE ELEVATION

NOTES:
1. MINIMUM COVER OVER TOP OF PIPE SHALL BE 2'-0".
2. WALL THICKNESS SHALL BE SUFFICIENT TO MEET HS 20 LOADING.
3. WALL THICKNESS FOR STRUCTURES OVER 10' HIGH IS 12" FOR CONCRETE BLOCK UNITS, INSIDE DIMENSIONS REMAIN THE SAME.
4. ALL PIPES SHALL BE CUT FLUSH WITH INSIDE WALLS.
5. ALL BRICKS SHALL BE CONCRETE.
6. ALL CATCH BASIN SUMPS SHALL BE MIN. 2' BELOW THE OUTLET INVERT WITH THE EXCEPTION OF CB6 WHICH SHALL HAVE A 4' SUMP.

TYPE "C" CATCH BASIN

NOT TO SCALE

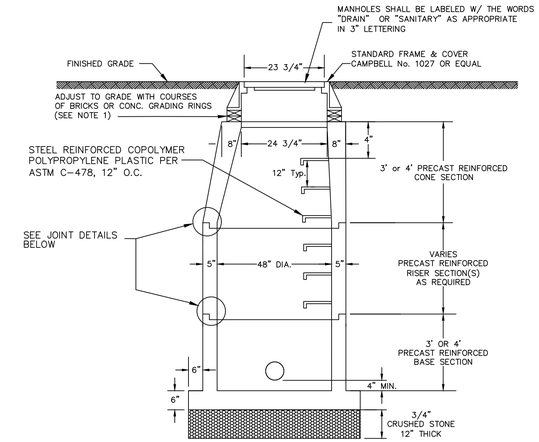

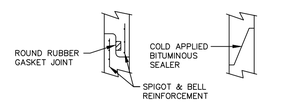

GASKET JOINT N.T.S. | ALTERNATE JOINT N.T.S.

NOTES:
1. MINIMUM COVER OVER TOP OF PIPE SHALL BE 2'-0" UNLESS OTHERWISE APPROVED BY THE ENGINEER.
2. TOP STEP TO BE A MAXIMUM OF 24" BELOW TOP OF MANHOLE FRAME & COVER.
3. WALL THICKNESS SHALL BE SUFFICIENT TO MEET HS 20 LOADING.
4. MANHOLE INSIDE DIAMETER MAY BE INCREASED AS DIRECTED BY THE ENGINEER TO ACCOMMODATE SIZE AND NUMBER OF PIPES. INCREASE WALL THICKNESS 1" FOR EACH 1 FT. OF INSIDE DIAMETER INCREASE.
5. FOR SHALLOW STRUCTURES, USE 8" SLAB IN PLACE OF CONE SECTION.
6. ALL PIPES SHALL BE CUT FLUSH WITH INSIDE WALLS.
7. FILL LIFTING HOLES WITH MORTAR.

PRECAST CONCRETE MANHOLE

NOT TO SCALE

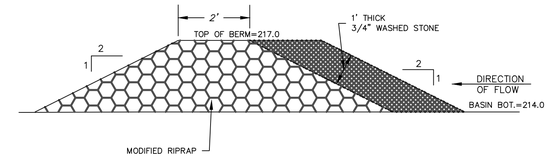

STONE FILTER BERM

NOT TO SCALE

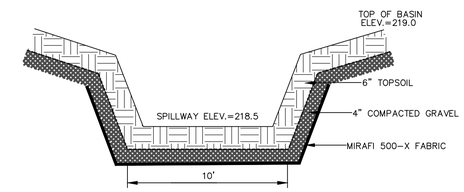

EARTHEN SPILLWAY

NOT TO SCALE

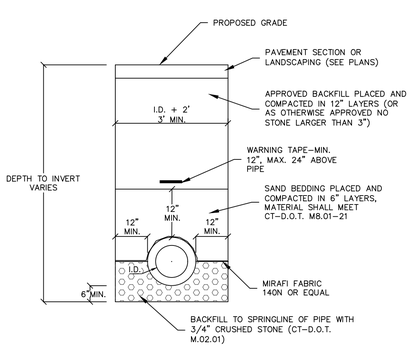

STANDARD STORM DRAIN DETAIL

NOT TO SCALE

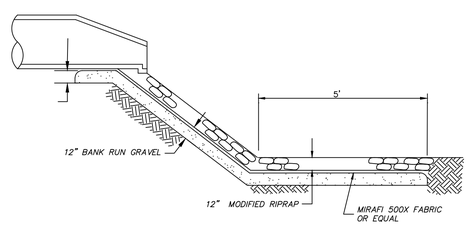

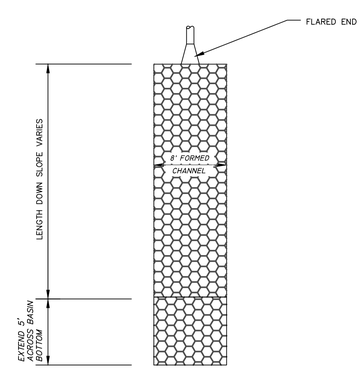

CHANNEL INTO STORMWATER BASIN

NOT TO SCALE

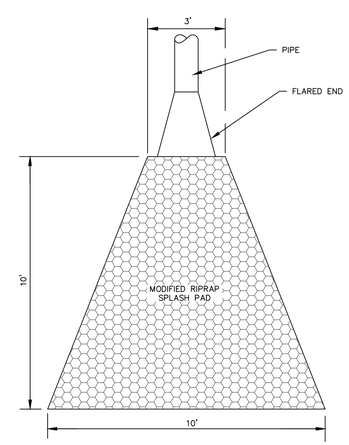

NOTE:
MODIFIED RIPRAP APRON (12" THICK) ON 6" GRANULAR BASE (M.02.01) ON MIRAFI 140N FABRIC OR EQUAL

TYPE A RIPRAP APRON (OP)

N.T.S.

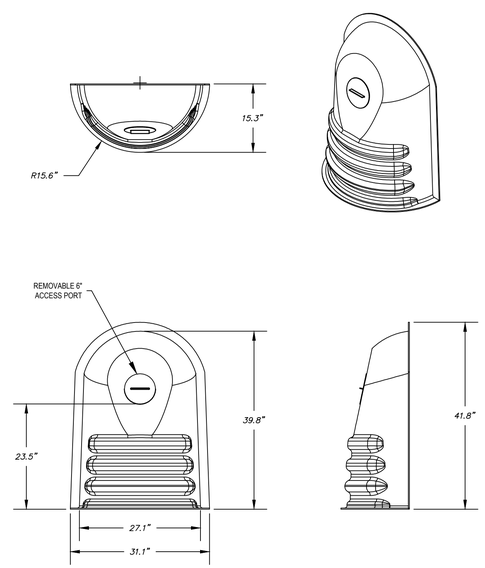

NOTES:
1. HIGH DENSITY POLYETHYLENE NYROPLAST ENVIROHOOD MODEL 24F FOR FLAT CONCRETE STRUCTURES.
2. INSTALL PER MANUFACTURER'S INSTALLATION INSTRUCTIONS.

NYROPLAST ENVIROHOOD DETAIL

NOT TO SCALE

RUSSO SURVEYORS·ENGINEERS SERVING CT & MA
J.R. Russo & Associates, LLC
1 Shoham Rd East Windsor, CT 06088 · CT 860.623.0569 · MA 413.785.1158
www.jrrusso.com · info@jrrusso.com

Applicant
Vernon Development LLC
56 East Main Street
Avon, Connecticut 06001

3-26-2022	TALCOTTVILLE RD ENTRANCE, APPLY VARIANCES
2-14-2022	PAGE NUMBERS

REVISIONS

BY: LF/TAC | CHK: JEU

The Learning Experience
Property Of
501 Talcottville Road, LLC
501 Talcottville Road
Vernon, Connecticut 06010
Parcel ID: 09-0007-0001D (Zone: C)

Details
(ALT 2)

DATE
1-11-22

SCALE
1"=20'

JOB NUMBER
2021-083

SHEET
10 of 12

S:\Acad\2021 Civil 3D\2021-083 Vernon Development - 501 Talcottville Rd\Russo Drawings\2021-083 B - Pushed forward.dwg

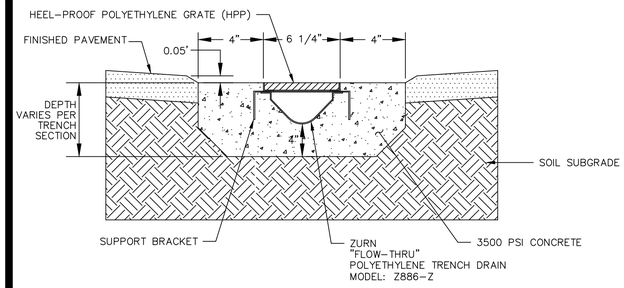

NOTE:
1. USE CHANNELS NO. 8601 – 8615 FOR 120' TRENCH LENGTH
2. CONNECT TRENCH TO OUTLET PIPE WITH U6 OUTLET ADAPTER AND 6" SCH40 PVC WITH 90° BEND.
3. SET CONCRETE, FRAME & GRATE SYSTEM 0.05' BELOW FINISHED PAVEMENT GRADE, AS SHOWN ABOVE.

TRENCH DRAIN DETAIL

NOT TO SCALE

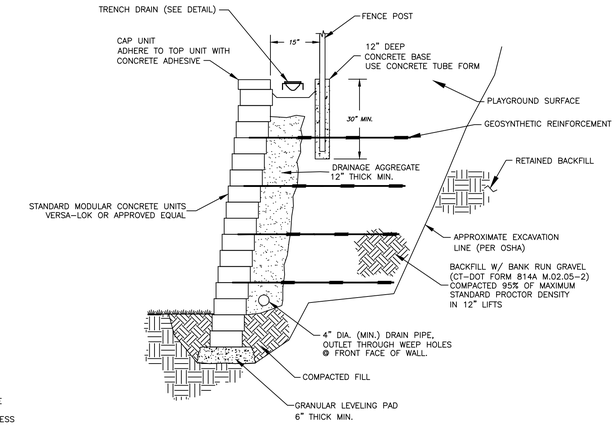

NOTE: CONTRACTOR TO OBTAIN FINAL WALL DESIGN PLANS PREPARED BY PROFESSIONAL ENGINEER LICENSED IN CT. FINAL SHOP DRAWINGS TO BE SUBMITTED TO SITE ENGINEER FOR APPROVAL.

TYPICAL SECTION REINFORCED RETAINING WALL

NOT TO SCALE

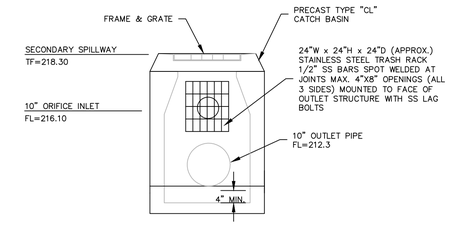

FRONT VIEW

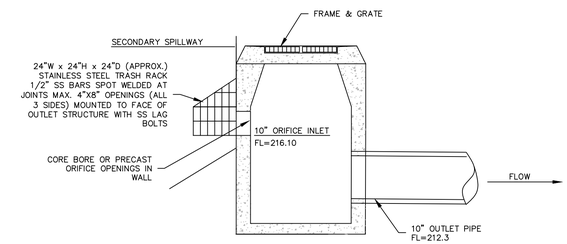

SIDE SECTION VIEW

BASIN OUTLET STRUCTURE

NOT TO SCALE

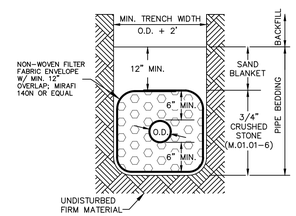

NOTES:
1. PROVIDE WARNING TAPE, 12-24" ABOVE TOP OF PIPE.
2. BACKFILL SHALL BE SUITABLE NATIVE MATERIAL UNLESS DETERMINED TO BE UNSUITABLE BY THE ENGINEER OR GRANULAR FILL M.02.01 PLACED AND COMPACTED IN 12" LOOSE LIFTS.
3. UNDER PAVED AREAS COMPACT BACKFILL TO 95% OF THE MATERIAL'S MAXIMUM DRY DENSITY AS DETERMINED BY A STANDARD PROCTOR TEST. UNDER UNPAVED AREAS COMPACT TO 90%.
4. UNSUITABLE TRENCH MATERIAL TO BE REMOVED AND REPLACED WITH 3/4" CRUSHED STONE AS DIRECTED BY ENGINEER.

TYPICAL SANITARY SEWER TRENCH SECTION

NOT TO SCALE

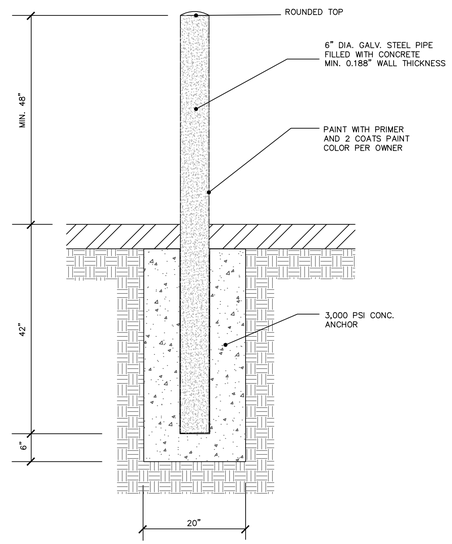

PIPE BOLLARD

NOT TO SCALE

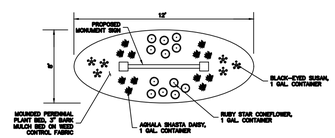

MONUMENT SIGN ISLAND

NOT TO SCALE

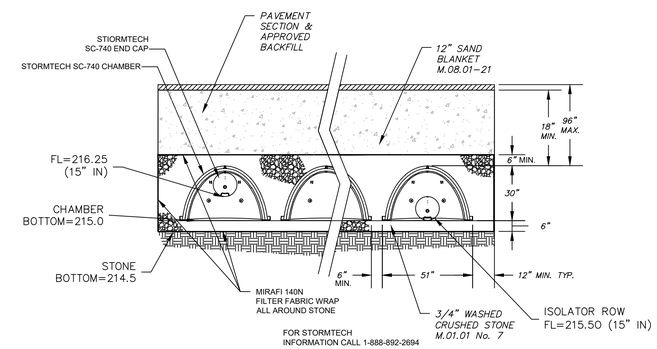

TYPICAL SECTION

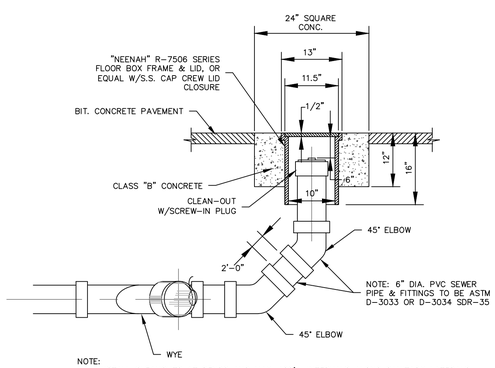

NOTE:
1. INSTALL CLEANOUTS AT BENDS AND MAX. 100'± INTERVALS ALONG SANITARY LATERALS.

CLEAN-OUT

NOT TO SCALE

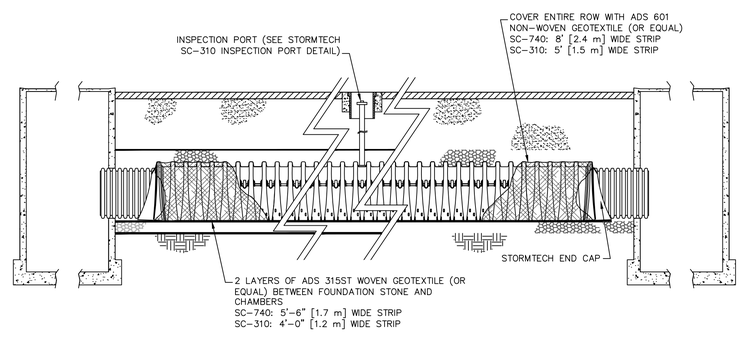

STORMTECH ISOLATOR ROW PROFILE

NOT TO SCALE

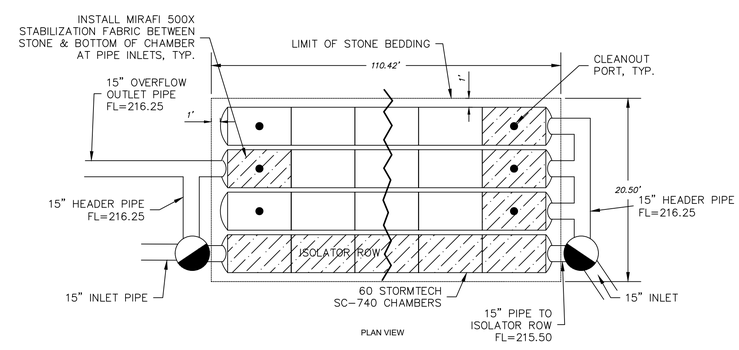

PLAN VIEW

STORMTECH CHAMBER SUBSURFACE DETENTION SYSTEM

NOT TO SCALE

RUSSO
SURVEYORS·ENGINEERS
SERVING CT & MA
J.R. Russo & Associates, LLC
1 Shoham Rd East Windsor, CT 06088 • CT 860.623.0969 • MA 413.785.158
www.russo.com • info@russo.com

Applicant
Vernon Development LLC
56 East Main Street
Avon, Connecticut 06001

REVISIONS		
3-26-2022	TALCOTTVILLE RD ENTRANCE, APPLY VARIANCES	
2-14-2022	PAGE NUMBERS, ADD OUTLET STRUCTURE	
BY: LF/TAC	CHK: JEU	

The Learning Experience
Property Of
501 Talcottville Road, LLC
501 Talcottville Road
Vernon, Connecticut 06010
Parcel ID: 09-0007-0001D (Zone: C)

Details
(ALT 2)

DATE
1-11-22

SCALE
1"=20'

JOB NUMBER
2021-083

SHEET
11 of 12

S:\Acad\2021 Civil 3D\2021-083 Vernon Development - 501 Talcottville Rd\Russo Drawings\2021-083 B - Pushed forward.dwg

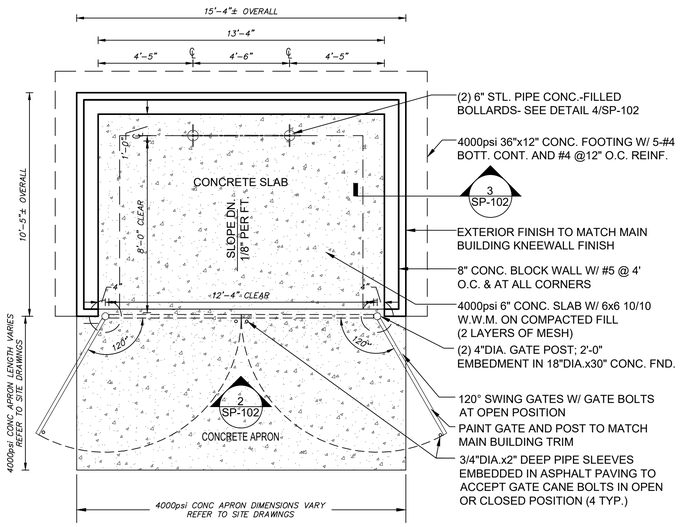

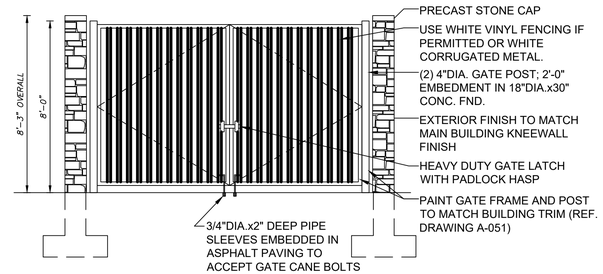

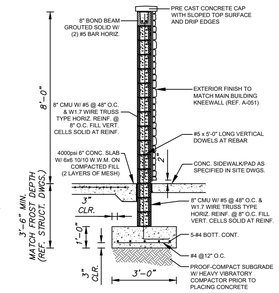

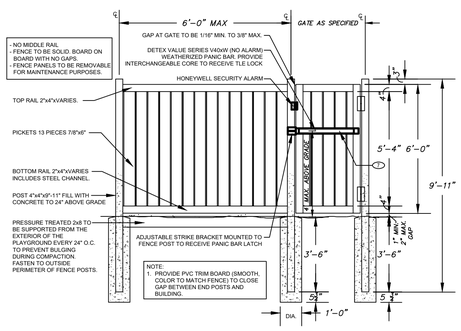

2 TYP. PVC FENCE AND GATE WITH PANIC HARDWARE
SCALE 1/2" = 1'-0"

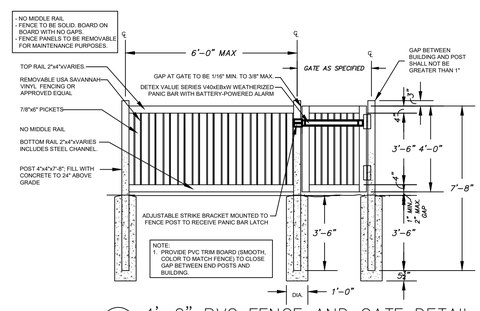

3 4'-0" PVC FENCE AND GATE DETAIL
SCALE 1/2" = 1'-0"

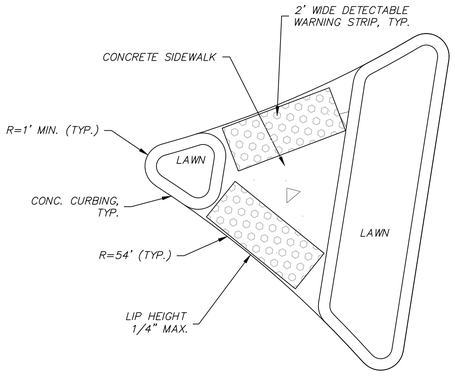

RAISED ISLAND W/ PEDESTRIAN CUT THROUGH

NOT TO SCALE

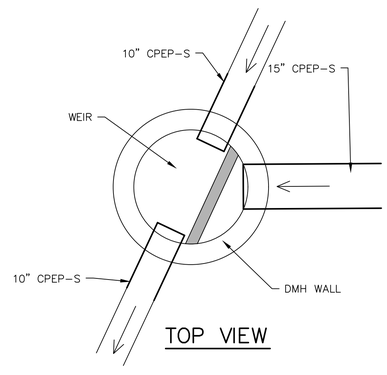

DMH #3 CONNECTION DETAIL

NOT TO SCALE

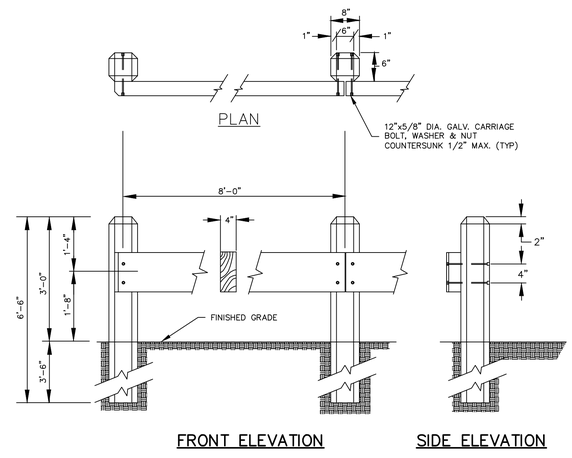

WOOD GUIDERAIL

N.T.S.

TABLES OF PLANTING MATERIALS FOR WETLAND CREATION & ENHANCEMENT AREAS
501 TALCOTVILLE ROAD, VERNON, CONNECTICUT

Table 1. Shrubs

Scientific Name	Zone	Common Name	Size	Shade tolerant?	Wetland Creation Area	Wetland Enhancement Area	Totals
SHRUBS							
Photinia pyrifolia	C	Chokeberry	3'-4'	N	0	4	4
Clethra alnifolia	B,C	Sweet pepperbush	3'-4'	Y	4	0	4
Ilex verticillata	A,B,C	Winterberry	3'-4'	Y	3	2	5
Sambucus nigra	B	Common elderberry	3'-4'	N	0	2	2
Swida amomum	B,C	Silky dogwood	3'-4'	N	0	3	3
Swida racemosum	B,C	Gray dogwood	3'-4'	Y	5	2	7
Vaccinium corymbosum	B,C	Highbush blueberry	3'-4'	Y	2	0	2
Viburnum cassinoides	B	Wild raisin	3'-4'	Y	2	0	2
Viburnum opulus	B,C	Cranberry viburnum	3'-4'	Y	0	3	3
Totals:					***16***	***16***	32

Table 2. Herbs

Hydrologic Zones: Zone A: Saturated/Shallow inundation; **Zone B**:temporary saturation/flooding;
Zone C: moist, poorly to moderately well drained

Scientific Name	Zone	Common Name	Form	NWI*	Spacing	Wetland Creation Area	Wetland Enhancement Area	Totals
Asclepias incarnata	B, C	Swamp milkweed	2"plug	OBL	2'OC	10	40	**50**
Carex crinita	A, B	Fringed sedge	2"plug	OBL	2'OC	25	25	**50**
Osmundastrum cinnamomeum	B, C	Cinnamon fern	#1 pot	FACW	2'OC	5	5	**10**
Eutrochium maculatum	B	Spotted Joe Pye weed	2" plug	FACW	1.5'OC	10	40	**50**
Carex lupulina	A, B	Hop sedge	2" plug	FACW+	2'OC	10	40	**50**
Total:						***60***	***150***	210

***Seed Mix to be applied at Wetland Creation Area** : New England Wetmix at 1lb/2,500 sq. ft. (Supplier: New England Wetland Plants, Inc.)*

RUSSO
SURVEYORS·ENGINEERS
SERVING CT & MA
J.R. Russo & Associates, LLC
1 Shoham Rd East Windsor, CT 06088 • CT 860.623.0969 • MA 413.785.158
www.jrrusso.com • info@jrrusso.com

Applicant
Vernon Development LLC
56 East Main Street
Avon, Connecticut 06001

REVISIONS		
3-25-2022	TALCOTTVILLE RD ENTRANCE, APPLY VARIANCES	

BY: LF/TAC CHK: JEU

The Learning Experience
Property Of
501 Talcottville Road, LLC
501 Talcottville Road
Vernon, Connecticut 06010
Parcel ID: 09-0007-0001D (Zone: C)

Details
(ALT 2)

DATE
2-14-22
SCALE
1"=20'
JOB NUMBER
2021-083
SHEET
12 of 12

S:\Acad\2021 Civil 3D\2021-083 Vernon Development - 501 Talcottville Rd\Russo Drawings\2021-083 B - Pushed forward.dwg

THE LEARNING EXPERIENCE
ACADEMY OF EARLY EDUCATION

501 Talcottville Road
Vernon, Connecticut

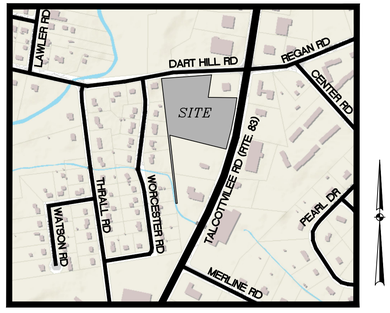

KEY PLAN MAP
1"=500'

ALTERNATE #1

Applicant
Vernon Development LLC
56 East Main Street
Avon, CT 06001
(860) 677-5607

Owner
501 Talcottville Road LLC
43 Ridgecrest Lane
Bristol, CT 06010-2910

LADA, P.C.
Land Planners
104 West Street
Simsbury, CT 06070 (860) 651-4971
Brewster, NY 10509 (845) 278-7424
Email: ladapc@snet.net

RUSSO
SURVEYORS • ENGINEERS
SERVING CT & MA
J.R. Russo & Associates, LLC
1 Shoham Rd East Windsor CT 06088 • CT 860.623.0569 • MA 413.785.1158
www.jrrusso.com • info@jrrusso.com

DRAWING INDEX

SHEET TITLE	SHEET NO.	LATEST REVISION
CIVIL		
COVER SHEET	1 of 12	4-06-2022
EXISTING CONDITIONS & DEMOLITION PLAN	2 of 12	3-17-2022
LAYOUT PLAN	3 of 12	3-17-2022
GRADING & EROSION & SEDIMENT CONTROL PLAN	4 of 12	3-17-2022
STORM SEWER PLAN	5 of 12	3-17-2022
UTILITY PLAN	6 of 12	3-28-2022
PLANTING PLAN	7 of 12	4-06-2022
EROSION & SEDIMENT CONTROL NOTES	8 of 12	3-17-2022
DETAILS	9 of 12	3-17-2022
DETAILS	10 of 12	3-17-2022
DETAILS	11 of 12	3-17-2022
DETAILS	12 of 12	3-17-2022

S:\Acad\2021 Civil 3D\2021-083 Vernon Development - 501 Talcottville Rd\Russo Drawings\2021-083 A.dwg

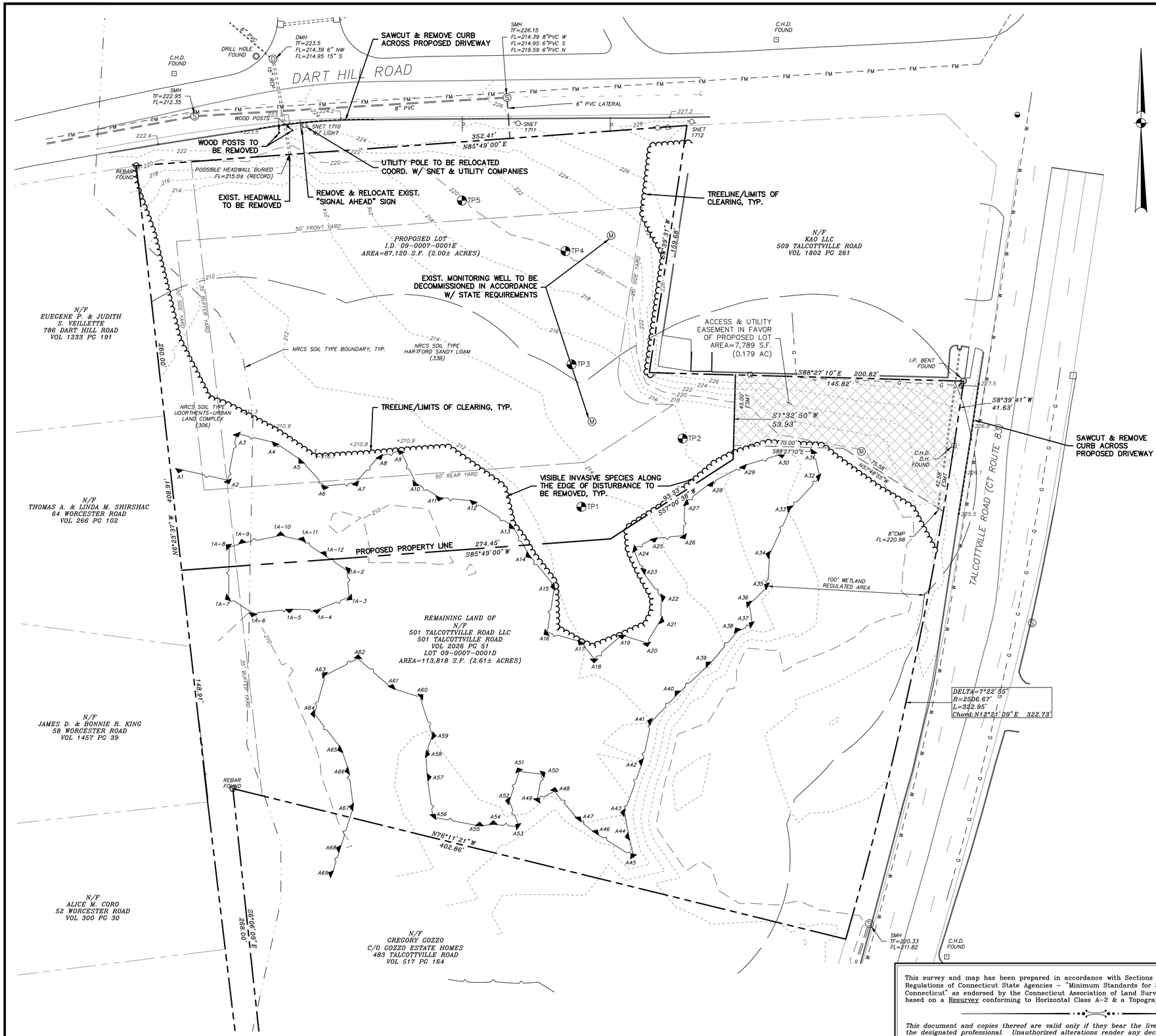

Reference Maps:

1. "Boundary Survey Prepared for 501 Talcottville Road LLC, 501 Talcottville Road (CT Route 83) & Dart Hill Road, Vernon, Connecticut" Sheet SV.01, Scale: 1"=50' Date: May 2021 by Alfred Benesch & Company.
2. "Topographic Survey Prepared for 501 Talcottville Road LLC, 501 Talcottville Road (CT Route 83) & Dart Hill Road, Vernon, Connecticut" Sheet SV.02Scale: 1"=30' Date: May 2021 by Alfred Benesch & Company.

Notes:

1. Portion of the parcel is located in inland wetlands as delineated by Rema Ecological Services per reference map #2.
2. Proposed lot does not lie within a special flood hazard area per "FEMA flood insurance rate map, town of Vernon, Connecticut community panel number 09013I0005C, revised August 9, 1999".
3. Horizontal and vertical datums are based upon map references prepared by Alfred Benesch & Company.
4. All underground utility locations on this plan are approximate and may not be complete. Anyone using this information without verifying the locations does so at their own risk. No construction will be done on this site prior to utility mark out. "Call Before You Dig 1-800-922-4455".
5. Boundary and existing conditions shown hereon are based on map references prepared by Alfred Benesch & Company.
6. Line striping in Talcottville Road (Rte. 83) approximated based on aerial photography.

LEGEND

	EXISTING UTILITY POLE
UG	PROPOSED UNDERGROUND ELECTRIC
G	EXISTING GAS LINE
G	PROPOSED GAS LINE
W	EXISTING WATER LINE
W	PROPOSED WATER LINE
FP	PROPOSED FIRE PROTECTION LINE
	EXISTING CATCH BASIN
	PROPOSED CATCH BASIN
	EXISTING DRAINAGE MANHOLE
	PROPOSED DRAINAGE MANHOLE
	EXISTING STORM SEWER
	PROPOSED STORM SEWER
RL	PROPOSED ROOF LEADER
S	EXISTING SANITARY MANHOLE
	EXISTING SANITARY SEWER
FM	EXISTING SANITARY FORCE MAIN
S	PROPOSED SANITARY SEWER
	EXISTING SIGN
	PROPOSED SIGN
	EXISTING IRON PIN (FOUND)
	PROPOSED IRON PIN (TO BE SET)
	EXISTING MONUMENT (FOUND)
135x5	EXISTING SPOT GRADE
135.5	PROPOSED SPOT GRADE
136	EXISTING CONTOUR
136	PROPOSED CONTOUR
	LIMIT OF WETLANDS
	PROPERTY LINE
	EASEMENT LINE
	BUILDING LINE
	STAKED HAYBALES OR SILT FENCE

GRAPHIC SCALE

30 0 15 30 60 120

(IN FEET)
1 inch = 30 ft.

This survey and map has been prepared in accordance with Sections 20-300b-1 thru 20-300b-20 of the Regulations of Connecticut State Agencies - "Minimum Standards for Surveys and Maps in the State of Connecticut" as endorsed by the Connecticut Association of Land Surveyors, Inc. It is a Property Survey based on a Resurvey conforming to Horizontal Class A-2 & a Topographic Survey conforming to Class T-2.

This document and copies thereof are valid only if they bear the live signature and embossed seal of the designated professional. Unauthorized alterations render any declaration hereon null and void.

TO THE BEST OF MY KNOWLEDGE AND BELIEF THIS MAP IS SUBSTANTIALLY CORRECT AS NOTED HEREON.

RUSSO SURVEYORS·ENGINEERS SERVING CT & MA
J.R. Russo & Associates, LLC
1 Sheham Rd East Windsor, CT 06088 · CT 8606331569 · MA 4437851158
www.jrrusso.com · info@jrrusso.com

Applicant
Vernon Development LLC
56 East Main Street
Avon, Connecticut 06001

REVISIONS		
3-17-2022	TALCOTTVILLE ROAD ENTRANCE	
2-14-2022	PAGE NUMBERS	

BY: LF/TAC CHK: JEU

The Learning Experience
Property Of
501 Talcottville Road, LLC
501 Talcottville Road
Vernon, Connecticut 06010
Parcel ID: 09-0007-0001D (Zone: C)

Existing Conditions & Demolition Plan
(ALT 1)

DATE 1-11-22
SCALE 1"=30'
JOB NUMBER 2021-083
SHEET 2 of 12

S:\Acad\2021 Civil 3D\2021-083 Vernon Development - 501 Talcottville Rd\Russo Drawings\2021-083 A.dwg

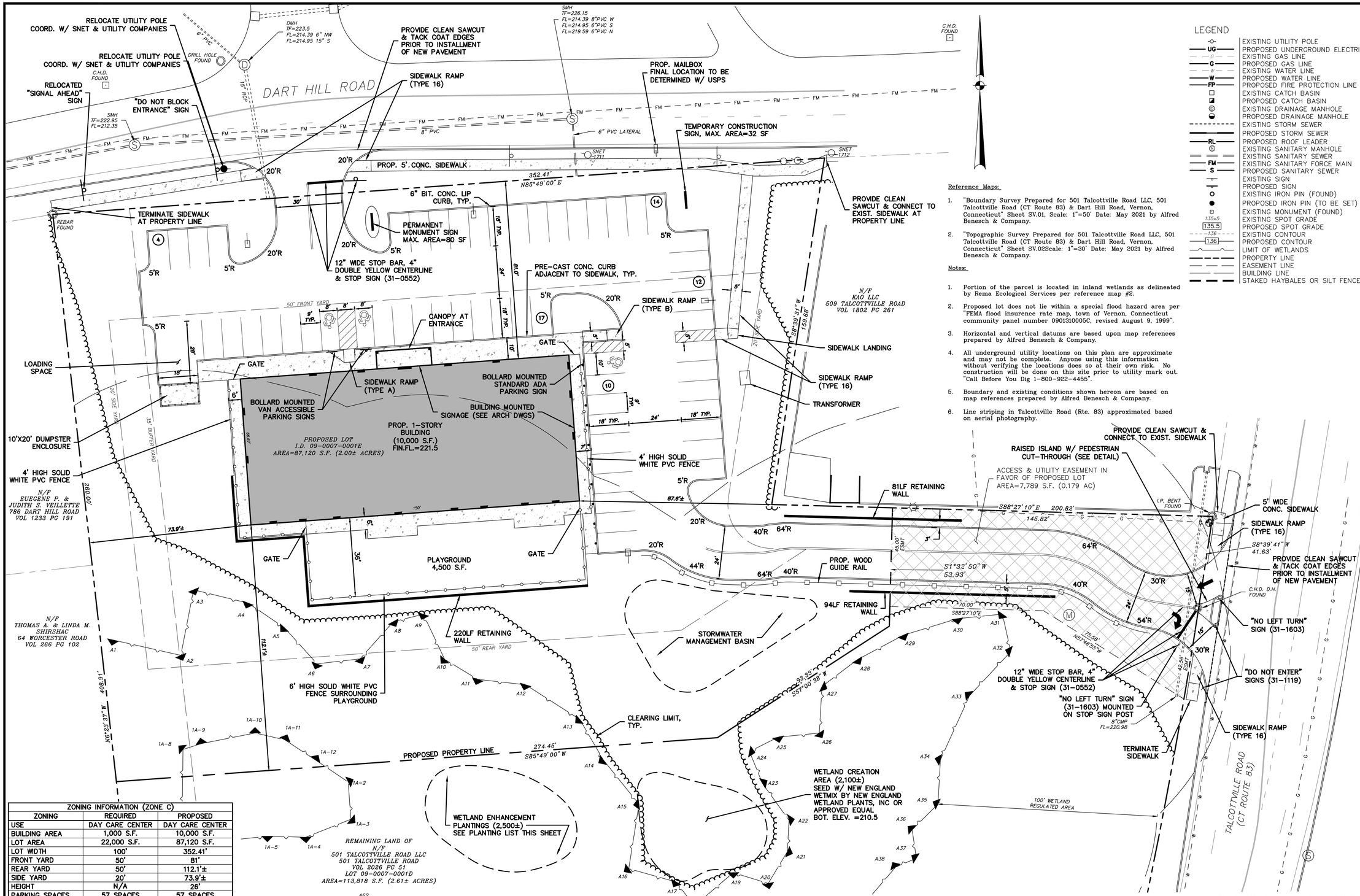

LEGEND

	EXISTING UTILITY POLE
UG	PROPOSED UNDERGROUND ELECTRIC
G	EXISTING GAS LINE
G	PROPOSED GAS LINE
W	EXISTING WATER LINE
W	PROPOSED WATER LINE
FP	PROPOSED FIRE PROTECTION LINE
	EXISTING CATCH BASIN
	PROPOSED CATCH BASIN
	EXISTING DRAINAGE MANHOLE
	PROPOSED DRAINAGE MANHOLE
	EXISTING STORM SEWER
	PROPOSED STORM SEWER
RL	PROPOSED ROOF LEADER
	EXISTING SANITARY MANHOLE
	EXISTING SANITARY SEWER
FM	EXISTING SANITARY FORCE MAIN
S	PROPOSED SANITARY SEWER
	EXISTING SIGN
	PROPOSED SIGN
	EXISTING IRON PIN (FOUND)
	PROPOSED IRON PIN (TO BE SET)
	EXISTING MONUMENT (FOUND)
135x5	EXISTING SPOT GRADE
135.5	PROPOSED SPOT GRADE
136	EXISTING CONTOUR
136	PROPOSED CONTOUR
	LIMIT OF WETLANDS
	PROPERTY LINE
	EASEMENT LINE
	BUILDING LINE
	STAKED HAYBALES OR SILT FENCE

Reference Maps:

1. "Boundary Survey Prepared for 501 Talcottville Road LLC, 501 Talcottville Road (CT Route 83) & Dart Hill Road, Vernon, Connecticut" Sheet SV.01, Scale: 1"=50' Date: May 2021 by Alfred Benesch & Company.
2. "Topographic Survey Prepared for 501 Talcottville Road LLC, 501 Talcottville Road (CT Route 83) & Dart Hill Road, Vernon, Connecticut" Sheet SV.02Scale: 1"=30' Date: May 2021 by Alfred Benesch & Company.

Notes:

1. Portion of the parcel is located in inland wetlands as delineated by Rema Ecological Services per reference map #2.
2. Proposed lot does not lie within a special flood hazard area per "FEMA flood insurence rate map, town of Vernon, Connecticut community panel number 0901310005C, revised August 9, 1999".
3. Horizontal and vertical datums are based upon map references prepared by Alfred Benesch & Company.
4. All underground utility locations on this plan are approximate and may not be complete. Anyone using this information without verifying the locations does so at their own risk. No construction will be done on this site prior to utility mark out. "Call Before You Dig 1-800-922-4455".
5. Boundary and existing conditions shown hereon are based on map references prepared by Alfred Benesch & Company.
6. Line striping in Talcottville Road (Rte. 83) approximated based on aerial photography.

ZONING INFORMATION (ZONE C)		
ZONING	REQUIRED	PROPOSED
USE	DAY CARE CENTER	DAY CARE CENTER
BUILDING AREA	1,000 S.F.	10,000 S.F.
LOT AREA	22,000 S.F.	87,120 S.F.
LOT WIDTH	100'	352.41'
FRONT YARD	50'	81'
REAR YARD	50'	112.1'±
SIDE YARD	20'	73.9'±
HEIGHT	N/A	26'
PARKING SPACES	57 SPACES	57 SPACES

PROP. BUILDING COVERAGE: 11.5% (10,000 S.F.)
PROP. LOT COVERAGE: 47.6% (41,448 S.F.)

PARKING REQUIREMENTS
DAYCARE: 1 SPACE/1 EMPLOYEE * 26 EMPLOYEES = 26 SPACES
1 SPACE/5 STUDENTS * 153 STUDENTS = 30.6 SPACES

TOTAL SPACES REQUIRED: 57 SPACES
TOTAL SPACES PROVIDED: 57 SPACES (3 HANDICAP ACCESSIBLE)

This survey and map has been prepared in accordance with Sections 20-300b-1 thru 20-300b-20 of the Regulations of Connecticut State Agencies – "Minimum Standards for Surveys and Maps in the State of Connecticut" as endorsed by the Connecticut Association of Land Surveyors, Inc. It is a Property Survey based on a Resurvey conforming to Horizontal Class A-2 & a Topographic Survey conforming to Class T-2.

This document and copies thereof are valid only if they bear the live signature and embossed seal of the designated professional. Unauthorized alterations render any declaration hereon null and void.

TO THE BEST OF MY KNOWLEDGE AND BELIEF THIS MAP IS SUBSTANTIALLY CORRECT AS NOTED HEREON.

RUSSO SURVEYORS·ENGINEERS SERVING CT & MA
J.R. Russo & Associates, LLC
1 Shoham Rd East Windsor, CT 06088 · CT 860.623.0569 · MA 413.785.1158
www.jrrusso.com · info@jrrusso.com

Applicant
Vernon Development LLC
56 East Main Street
Avon, Connecticut 06001

REVISIONS		
3-17-2022	TALCOTTVILLE ROAD ENTRANCE	
2-14-2022	WETLAND MITIGATION, LEAK-OFF, BASIN OUTLET	
BY: LF/TAC	CHK: JEU	

The Learning Experience
Property Of
501 Talcottville Road, LLC
501 Talcottville Road
Vernon, Connecticut 06010
Parcel ID: 09-0007-0001D (Zone: C)

Layout Plan
(ALT 1)

DATE 1-11-22
SCALE 1"=20'
JOB NUMBER 2021-083
SHEET 3 of 12

S:\Acad\2021 Civil 3D\2021-083 Vernon Development - 501 Talcottville Rd\Russo Drawings\2021-083 A.dwg

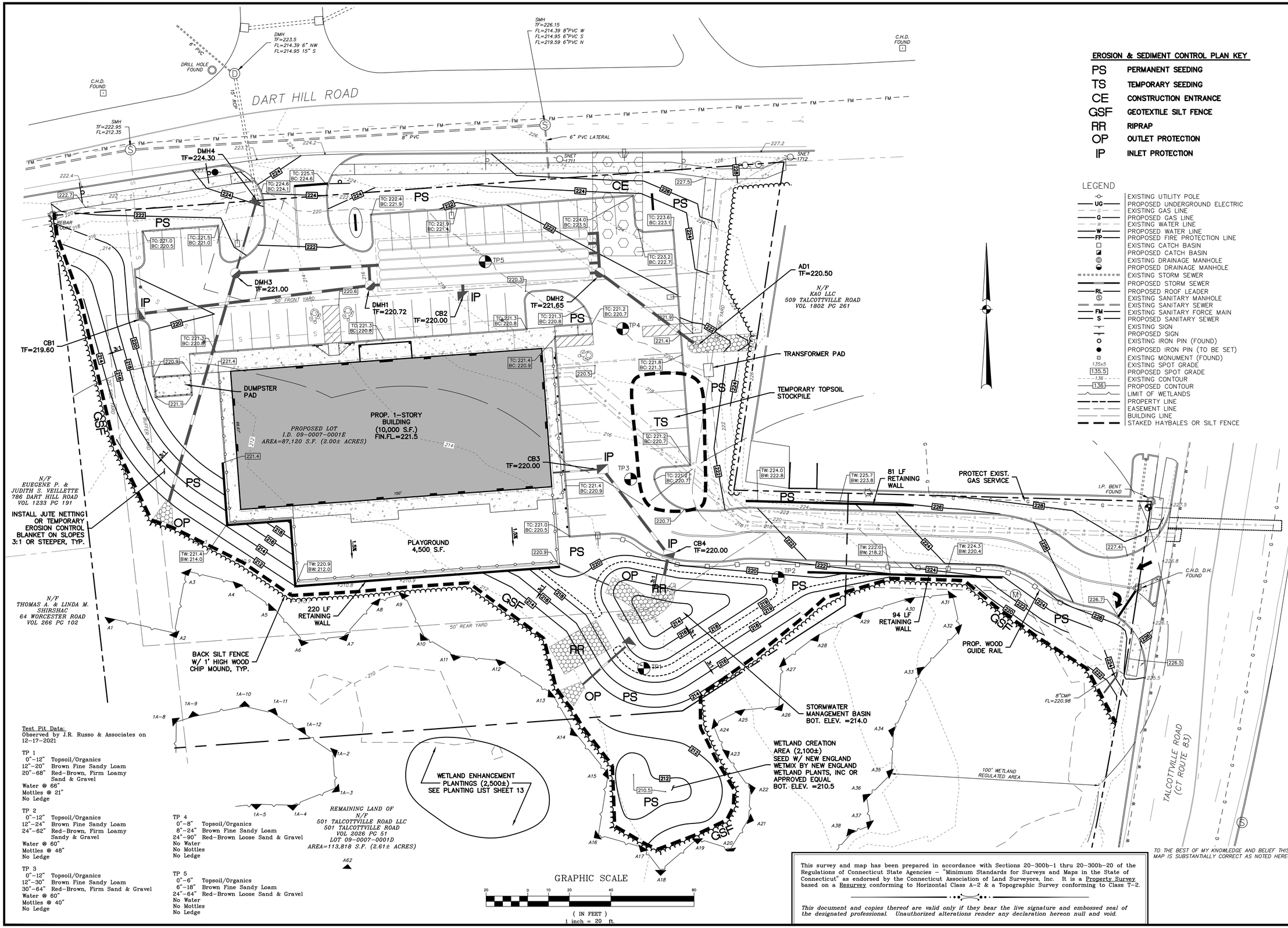

Test Pit Data:
Observed by J.R. Russo & Associates on 12-17-2021

TP 1
0"-12" Topsoil/Organics
12"-20" Brown Fine Sandy Loam
20"-68" Red-Brown, Firm Loamy Sand & Gravel
Water @ 66"
Mottles @ 21"
No Ledge

TP 2
0"-12" Topsoil/Organics
12"-24" Brown Fine Sandy Loam
24"-62" Red-Brown, Firm Loamy Sandy & Gravel
Water @ 60"
Mottles @ 48"
No Ledge

TP 3
0"-12" Topsoil/Organics
12"-30" Brown Fine Sandy Loam
30"-64" Red-Brown, Firm Sand & Gravel
Water @ 60"
Mottles @ 40"
No Ledge

TP 4
0"-8" Topsoil/Organics
8"-24" Brown Fine Sandy Loam
24"-90" Red-Brown Loose Sand & Gravel
No Water
No Mottles
No Ledge

TP 5
0"-6" Topsoil/Organics
6"-18" Brown Fine Sandy Loam
24"-64" Red-Brown Loose Sand & Gravel
No Water
No Mottles
No Ledge

This survey and map has been prepared in accordance with Sections 20-300b-1 thru 20-300b-20 of the Regulations of Connecticut State Agencies - "Minimum Standards for Surveys and Maps in the State of Connecticut" as endorsed by the Connecticut Association of Land Surveyors, Inc. It is a Property Survey based on a Resurvey conforming to Horizontal Class A-2 & a Topographic Survey conforming to Class T-2.

This document and copies thereof are valid only if they bear the live signature and embossed seal of the designated professional. Unauthorized alterations render any declaration hereon null and void.

TO THE BEST OF MY KNOWLEDGE AND BELIEF THIS MAP IS SUBSTANTIALLY CORRECT AS NOTED HEREON.

EROSION & SEDIMENT CONTROL PLAN KEY

PS	PERMANENT SEEDING
TS	TEMPORARY SEEDING
CE	CONSTRUCTION ENTRANCE
GSF	GEOTEXTILE SILT FENCE
RR	RIPRAP
OP	OUTLET PROTECTION
IP	INLET PROTECTION

LEGEND

	EXISTING UTILITY POLE
UG	PROPOSED UNDERGROUND ELECTRIC
G	EXISTING GAS LINE
G	PROPOSED GAS LINE
W	EXISTING WATER LINE
W	PROPOSED WATER LINE
FP	PROPOSED FIRE PROTECTION LINE
	EXISTING CATCH BASIN
	PROPOSED CATCH BASIN
	EXISTING DRAINAGE MANHOLE
	PROPOSED DRAINAGE MANHOLE
	EXISTING STORM SEWER
	PROPOSED STORM SEWER
RL	PROPOSED ROOF LEADER
	EXISTING SANITARY MANHOLE
	EXISTING SANITARY SEWER
FM	EXISTING SANITARY FORCE MAIN
S	PROPOSED SANITARY SEWER
	EXISTING SIGN
	PROPOSED SIGN
	EXISTING IRON PIN (FOUND)
	PROPOSED IRON PIN (TO BE SET)
	EXISTING MONUMENT (FOUND)
135x5	EXISTING SPOT GRADE
135.5	PROPOSED SPOT GRADE
136	EXISTING CONTOUR
136	PROPOSED CONTOUR
	LIMIT OF WETLANDS
	PROPERTY LINE
	EASEMENT LINE
	BUILDING LINE
	STAKED HAYBALES OR SILT FENCE

RUSSO
SURVEYORS·ENGINEERS
SERVING CT & MA
J.R. Russo & Associates, LLC
1 Sheham Rd East Windsor, CT 06088 · CT 860.623.0569 · MA 413.785.1158
www.jrrusso.com · info@jrrusso.com

Applicant
Vernon Development LLC
56 East Main Street
Avon, Connecticut 06001

REVISIONS		
3-17-2022	TALCOTTVILLE ROAD ENTRANCE	
3-01-2022	SHIFT CONSTRUCTION ENTRANCE EAST	
2-14-2022	WETLAND MITIGATION, LEAK-OFF, BASIN OUTLET	

BY: LF/TAC CHK: JEU

The Learning Experience
Property Of
501 Talcottville Road, LLC
501 Talcottville Road
Vernon, Connecticut 06010
Parcel ID: 09-0007-0001D (Zone: C)

Grading & Erosion & Sediment Control Plan
(ALT 1)

DATE 1-11-22
SCALE 1"=20'
JOB NUMBER 2021-083
SHEET 4 of 12

S:\Acad\2021 Civil 3D\2021-083 Vernon Development - 501 Talcottville Rd\Russo Drawings\2021-083 A.dwg

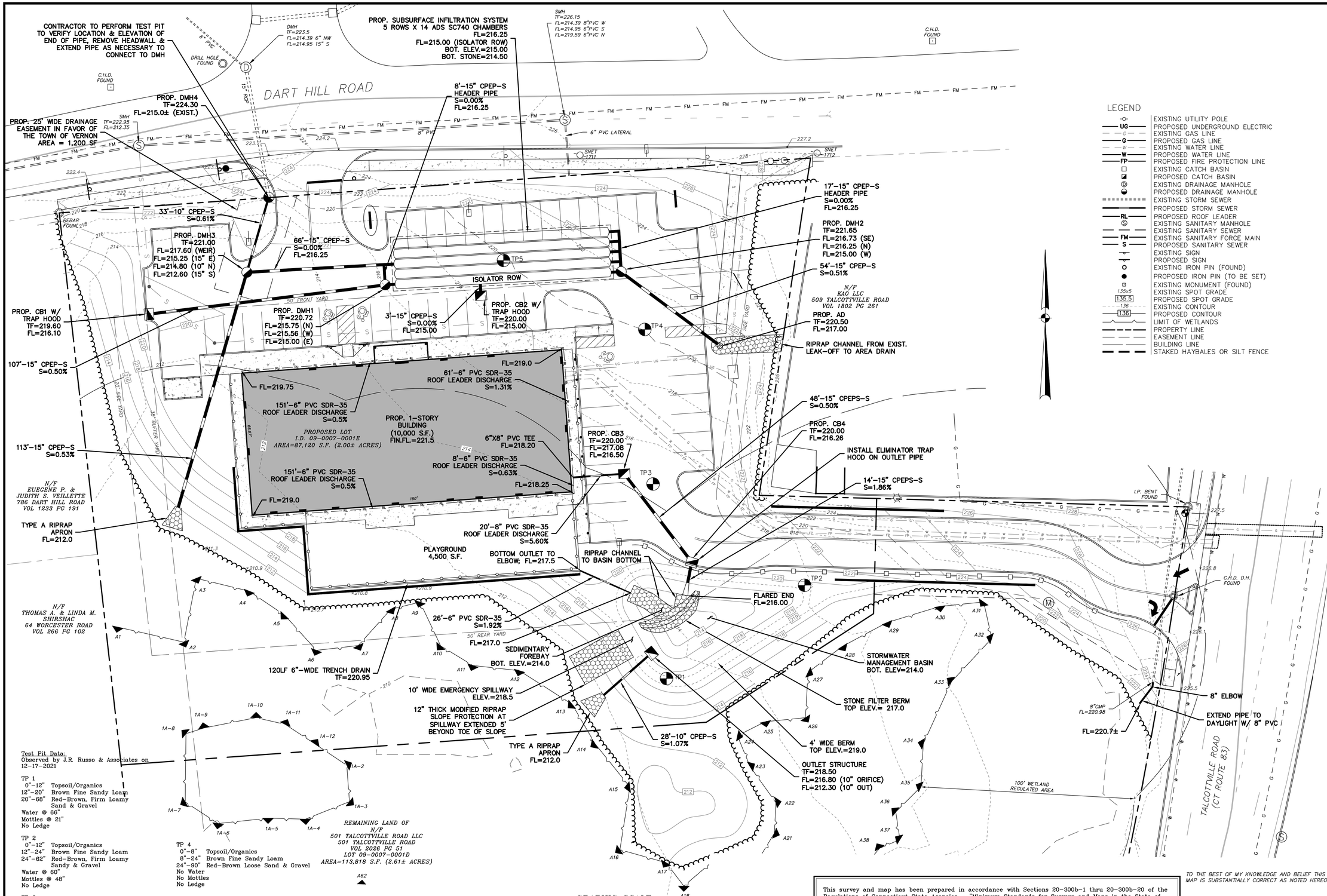

LEGEND

	EXISTING UTILITY POLE
UG	PROPOSED UNDERGROUND ELECTRIC
G	EXISTING GAS LINE
G	PROPOSED GAS LINE
W	EXISTING WATER LINE
W	PROPOSED WATER LINE
FP	PROPOSED FIRE PROTECTION LINE
	EXISTING CATCH BASIN
	PROPOSED CATCH BASIN
	EXISTING DRAINAGE MANHOLE
	PROPOSED DRAINAGE MANHOLE
	EXISTING STORM SEWER
	PROPOSED STORM SEWER
RL	PROPOSED ROOF LEADER
	EXISTING SANITARY MANHOLE
	EXISTING SANITARY SEWER
FM	EXISTING SANITARY FORCE MAIN
S	PROPOSED SANITARY SEWER
	EXISTING SIGN
	PROPOSED SIGN
	EXISTING IRON PIN (FOUND)
	PROPOSED IRON PIN (TO BE SET)
	EXISTING MONUMENT (FOUND)
135x5	EXISTING SPOT GRADE
135.5	PROPOSED SPOT GRADE
136	EXISTING CONTOUR
136	PROPOSED CONTOUR
	LIMIT OF WETLANDS
	PROPERTY LINE
	EASEMENT LINE
	BUILDING LINE
	STAKED HAYBALES OR SILT FENCE

Test Pit Data:
Observed by J.R. Russo & Associates on 12-17-2021

TP 1
0"-12" Topsoil/Organics
12"-20" Brown Fine Sandy Loam
20"-68" Red-Brown, Firm Loamy Sand & Gravel
Water @ 66"
Mottles @ 21"
No Ledge

TP 2
0"-12" Topsoil/Organics
12"-24" Brown Fine Sandy Loam
24"-62" Red-Brown, Firm Loamy Sandy & Gravel
Water @ 60"
Mottles @ 48"
No Ledge

TP 3
0"-12" Topsoil/Organics
12"-30" Brown Fine Sandy Loam
30"-64" Red-Brown, Firm Sand & Gravel
Water @ 60"
Mottles @ 40"
No Ledge

TP 4
0"-8" Topsoil/Organics
8"-24" Brown Fine Sandy Loam
24"-90" Red-Brown Loose Sand & Gravel
No Water
No Mottles
No Ledge

TP 5
0"-6" Topsoil/Organics
6"-18" Brown Fine Sandy Loam
24"-64" Red-Brown Loose Sand & Gravel
No Water
No Mottles
No Ledge

This survey and map has been prepared in accordance with Sections 20-300b-1 thru 20-300b-20 of the Regulations of Connecticut State Agencies - "Minimum Standards for Surveys and Maps in the State of Connecticut" as endorsed by the Connecticut Association of Land Surveyors, Inc. It is a Property Survey based on a Resurvey conforming to Horizontal Class A-2 & a Topographic Survey conforming to Class T-2.

This document and copies thereof are valid only if they bear the live signature and embossed seal of the designated professional. Unauthorized alterations render any declaration hereon null and void.

TO THE BEST OF MY KNOWLEDGE AND BELIEF THIS MAP IS SUBSTANTIALLY CORRECT AS NOTED HEREON.

RUSSO
SURVEYORS·ENGINEERS
SERVING CT & MA
J.R. Russo & Associates, LLC
1 Shoham Rd East Windsor, CT 06088 · CT 860.623.0569 · MA 413.785.1158
www.jrrusso.com · info@jrrusso.com

Applicant
Vernon Development LLC
56 East Main Street
Avon, Connecticut 06001

REVISIONS	
3-17-2022	TALCOTTVILLE ROAD ENTRANCE
2-14-2022	WETLAND MITIGATION, LEAK-OFF, BASIN OUTLET

BY: LF/TAC | CHK: JEU

The Learning Experience
Property Of
501 Talcottville Road, LLC
501 Talcottville Road
Vernon, Connecticut 06010
Parcel ID: 09-0007-0001D (Zone: C)

Storm Sewer Plan
(ALT 1)

DATE: 1-11-22
SCALE: 1"=20'
JOB NUMBER: 2021-083
SHEET: 5 of 12

S:\Acad\2021 Civil 3D\2021-083 Vernon Development - 501 Talcottville Rd\Russo Drawings\2021-083 A.dwg

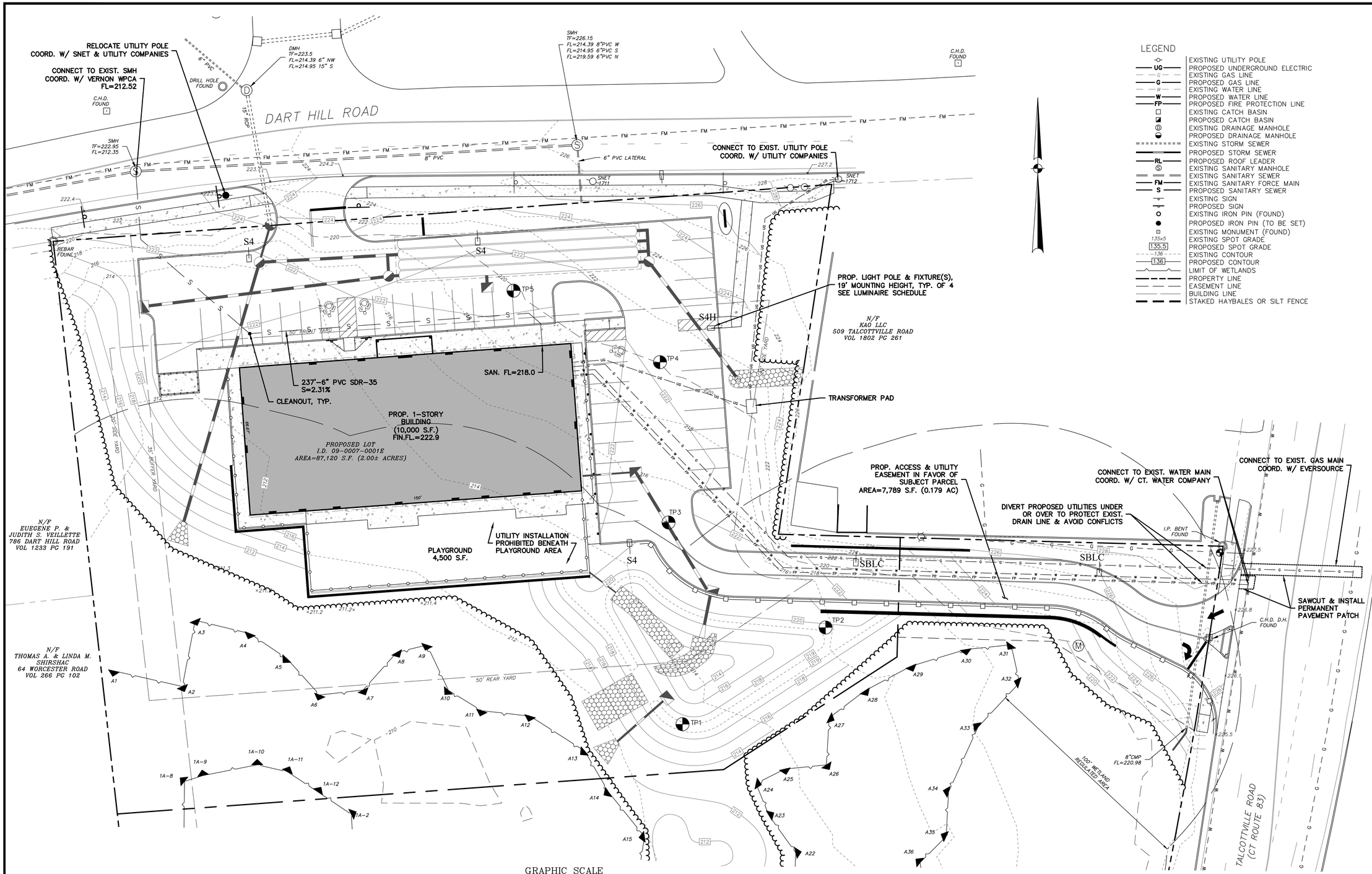

LEGEND

	EXISTING UTILITY POLE
UG	PROPOSED UNDERGROUND ELECTRIC
G	EXISTING GAS LINE
G	PROPOSED GAS LINE
W	EXISTING WATER LINE
W	PROPOSED WATER LINE
FP	PROPOSED FIRE PROTECTION LINE
	EXISTING CATCH BASIN
	PROPOSED CATCH BASIN
	EXISTING DRAINAGE MANHOLE
	PROPOSED DRAINAGE MANHOLE
	EXISTING STORM SEWER
	PROPOSED STORM SEWER
RL	PROPOSED ROOF LEADER
	EXISTING SANITARY MANHOLE
	EXISTING SANITARY SEWER
FM	EXISTING SANITARY FORCE MAIN
S	PROPOSED SANITARY SEWER
	EXISTING SIGN
	PROPOSED SIGN
	EXISTING IRON PIN (FOUND)
	PROPOSED IRON PIN (TO BE SET)
	EXISTING MONUMENT (FOUND)
135x5	EXISTING SPOT GRADE
135.5	PROPOSED SPOT GRADE
136	EXISTING CONTOUR
136	PROPOSED CONTOUR
	LIMIT OF WETLANDS
	PROPERTY LINE
	EASEMENT LINE
	BUILDING LINE
	STAKED HAYBALES OR SILT FENCE

GRAPHIC SCALE

20 0 10 20 40 80

(IN FEET)
1 inch = 20 ft.

Luminaire Schedule									
Symbol	Qty	Label	Arrangement	Luminaire Lumens	Luminaire Watts	LLF	BUG Rating	Mounting Height	Description
	3	S4	Single	12574	102	0.900	B2-U0-G3	19	Lithonia DSX1 LED P3 40K TFTM MVOLT SPA DBLXD - SSS 18 4C DM19A DBLXD 18FT POLE on 1FT BASE
	1	S4H	Single	11312	125	0.900	B2-U0-G2	19	Lithonia DSX1 LED P4 40K TFTM MVOLT SPA HS DBLXD - SSS 18 4C DM19AS DBLXD 18FT POLE on 1FT BASE
	2	SBLC	Single	7293	70	0.900	B1-U0-G2	19	Lithonia DSX1 LED P2 40K BLC MVOLT SPA DBLXD - SSS 18 4C DM19A DBLXD 18FT POLE on 1FT BASE

This survey and map has been prepared in accordance with Sections 20–300b–1 thru 20–300b–20 of the Regulations of Connecticut State Agencies – "Minimum Standards for Surveys and Maps in the State of Connecticut" as endorsed by the Connecticut Association of Land Surveyors, Inc. It is a Property Survey based on a Resurvey conforming to Horizontal Class A–2 & a Topographic Survey conforming to Class T–2.

This document and copies thereof are valid only if they bear the live signature and embossed seal of the designated professional. Unauthorized alterations render any declaration hereon null and void.

TO THE BEST OF MY KNOWLEDGE AND BELIEF THIS MAP IS SUBSTANTIALLY CORRECT AS NOTED HEREON.

RUSSO
SURVEYORS • ENGINEERS
SERVING CT & MA
J.R. Russo & Associates, LLC
1 Sheham Rd East Windsor, CT 06088 • CT 860.623.0569 • MA 413.785.1158
www.jrrusso.com • info@jrrusso.com

Applicant
Vernon Development LLC
56 East Main Street
Avon, Connecticut 06001

REVISIONS		
3-28-2022	SITE LIGHTING	
3-26-2022	TALCOTTVILLE RD ENTRANCE, APPLY VARIANCES	
2-14-2022	WETLAND MITIGATION, LEAK-OFF, BASIN OUTLET	

BY: LF/TAC CHK: JEU

The Learning Experience
Property Of
501 Talcottville Road, LLC
501 Talcottville Road
Vernon, Connecticut 06010
Parcel ID: 09-0007-0001D (Zone: C)

Utility Plan
(ALT 2)

DATE
1-11-22

SCALE
1"=20'

JOB NUMBER
2021-083

SHEET
6 of 12

S:\Acad\2021 Civil 3D\2021-083 Vernon Development - 501 Talcottville Rd\Russo Drawings\2021-083 B - Pushed forward.dwg

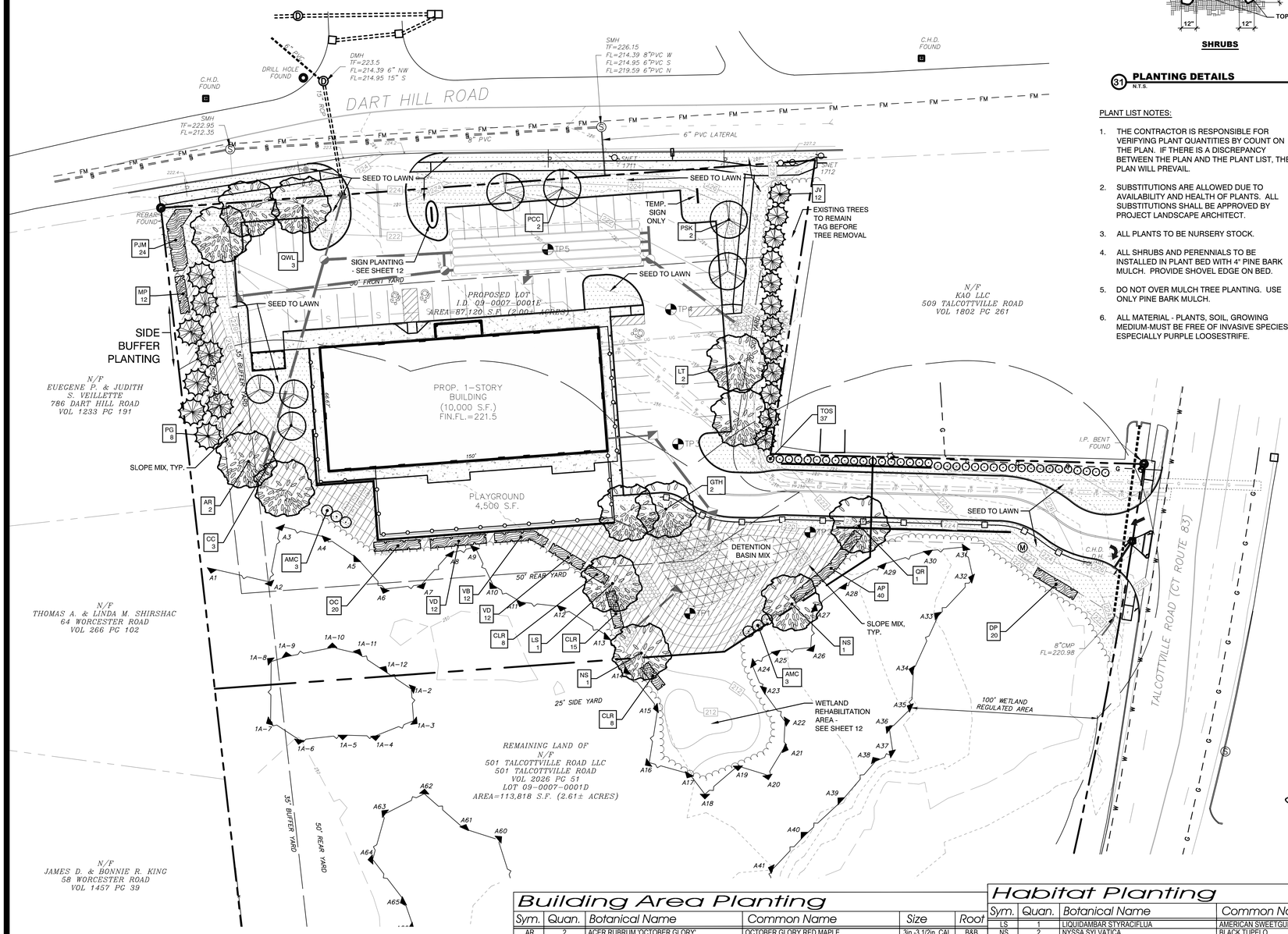

PLANTING NOTE

PLACE TOPSOIL MIXTURE IN BOTTOM OF HOLE AND SATURATE. AFTER PLACING PLANT, WORK TOPSOIL MIXTURE CAREFULLY AROUND ROOT BALL AND THEN SATURATE. WHEN HOLE IS ONE HALF FULL OF MIXTURE, SATURATE AGAIN. FILL HOLE COMPLETELY WITH TOPSOIL MIXTURE AND SATURATE AGAIN.

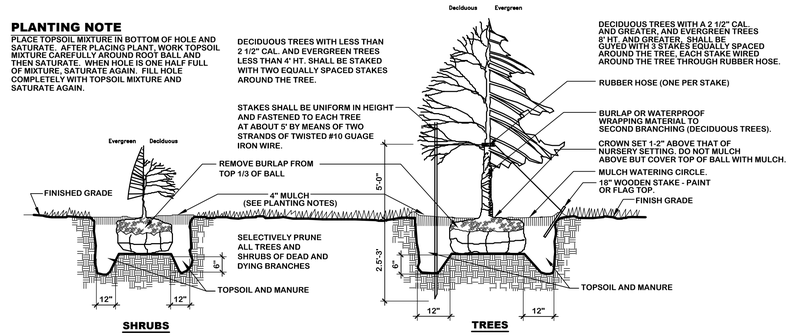

31 PLANTING DETAILS

N.T.S.

PLANT LIST NOTES:

1. THE CONTRACTOR IS RESPONSIBLE FOR VERIFYING PLANT QUANTITIES BY COUNT ON THE PLAN. IF THERE IS A DISCREPANCY BETWEEN THE PLAN AND THE PLANT LIST, THE PLAN WILL PREVAIL.
2. SUBSTITUTIONS ARE ALLOWED DUE TO AVAILABILITY AND HEALTH OF PLANTS. ALL SUBSTITUTIONS SHALL BE APPROVED BY PROJECT LANDSCAPE ARCHITECT.
3. ALL PLANTS TO BE NURSERY STOCK.
4. ALL SHRUBS AND PERENNIALS TO BE INSTALLED IN PLANT BED WITH 4" PINE BARK MULCH. PROVIDE SHOVEL EDGE ON BED.
5. DO NOT OVER MULCH TREE PLANTING. USE ONLY PINE BARK MULCH.
6. ALL MATERIAL - PLANTS, SOIL, GROWING MEDIUM-MUST BE FREE OF INVASIVE SPECIES - ESPECIALLY PURPLE LOOSESTRIFE.

SEEDING OPERATIONS

A. FERTILIZER AND LIMESTONE

CONTRACTOR SHALL CONDUCT APPROPRIATE SOIL TESTS TO DETERMINE AMOUNT OF FERTILIZER AND LIMESTONE REQUIRED TO ENSURE AN ACCEPTABLE LAWN.

GROUND LIMESTONE: 100LBS/1000S.F.
COMMERCIAL FERTILIZER: * 20LBS/1000S.F.

*PERCENTAGES OF NITROGEN, PHOSPHORIC ACID AND POTASH TO BE DETERMINED BY SOIL TESTS.

B. LAWN SEED

SEED MIXTURE FOR: LATE SUMMER / EARLY FALL / EARLY SPRING PLANTING. SOW AT RATE OF 4 LBS/1000 S.F.

CREEPING RED FESCUE	35 PARTS
CHEWINGS RED FESCUE	20 PARTS
KENTUCKY 31 TALL FESCUE	15 PARTS
ROUGH BLUEGRASS	10 PARTS
BARON BLUEGRASS	20 PARTS

SEED MIXTURE FOR PLANTING MAY 1 TO LATE SUMMER. SOW AT A RATE OF 6 LBS/1000 S.F.

CREEPING RED FESCUE	35 PARTS
CHEWINGS RED FESCUE	20 PARTS
KENTUCKY 31 TALL FESCUE	20 PARTS
DOMESTIC RYEGRASS	25 PARTS

C. SLOPE MIX

SOW AT RATE OF 6 LBS/1000 S.F.

CREEPING RED FESCUE	42 PARTS
FIESTA II PERENNIAL RYEGRASS	34 PARTS
RED TOP	8 PARTS
ALSIKE CLOVER	8 PARTS
BIRDSFOOT TREFOIL	8 PARTS

D. DETENTION BASIN MIX

USE "RETENTION BASIN FLOOR SEED" FROM NEW ENGLAND SEED CO. AT A RATE OF 2LB./1000 S.F. MIX WITH ANNUAL RYEGRASS AT A RATE OF 1/2LB./1000 S.F.

E. MEADOW MIX

USE NEW ENGLAND SEED CO. "NEW ENGLAND HORSE PASTURE MIXTURE" AT A RATE OF 100 LB./ACRE. MIX WITH VERMONT WILDFLOWER FARM [(802) 425-3500] DROUGHT TOLERANT PERENNIAL MIX AT A RATE OF 51 LB./ACRE. MIX WITH 20% ADDITIONAL COMMON TALL FESCUE.

33 SEEDING OPERATIONS & MIXES

N.T.S.

30' 15' 0' 30' 90'

SCALE: 1" = 30'

LEGEND

- PROPERTY LINE
- WETLAND LINE
- 100' UPLAND REVIEW AREA
- PROPOSED DECIDUOUS TREE
- PROPOSED FLOWERING TREE
- PROPOSED EVERGREEN TREE
- PROPOSED SHRUB
- ZZ 1 — PLANT LABEL & COUNT
- EXISTING TREELINE
- DETENTION BASIN MIX
- LAWN SEED MIX
- SLOPE MIX
- MEADOW MIX

STATE OF CONNECTICUT · BRI-ANN P. LADA · NO. 593 · LICENSED LANDSCAPE ARCHITECT

Side Buffer Planting

Sym.	Quan.	Botanical Name	Common Name	Size	Root
PG	8	PICEA GLAUCA	WHITE SPRUCE	5ft.-6ft. Ht.	B&B
MP	12	MYRICA PENSYLVANICA	NORTHERN BAYBERRY	24in.-30in. Ht.	CONT.
PJM	24	RHODODENDRON 'PJM'	PJM RHODODENDRON	24in.-30in. Ht.	CONT.

Building Area Planting

Sym.	Quan.	Botanical Name	Common Name	Size	Root
AR	2	ACER RUBRUM 'OCTOBER GLORY'	OCTOBER GLORY RED MAPLE	3in.-3 1/2in. CAL	B&B
CC	3	CERCIS CANADENSIS	EASTERN REDBUD	2in-2 1/2in. CAL	B&B
GTH	2	GLEDITSIA TRIACANTHOS 'SHADEMASTER'	SHADEMASTER HONEYLOCUST	3in.-3 1/2in. CAL	B&B
JV	12	JUNIPERUS VIRGINIANA 'EMERALD SENTINEL'	EMERALD SENTINEL EASTERN RED-CEDAR	5ft.-6ft. Ht.	B&B
LT	2	LIRIODENDRON TULIPIFERA	TULIPTREE	3in.-3 1/2in. CAL	B&B
PCC	2	PYRUS CALLERYANA 'CHANTICLEER'	ORNAMENTAL PEAR	3in.-3 1/2in. CAL	B&B
PSK	2	PRUNUS SERRULATA 'KWANZAN'	KWANZAN CHERRY	3in.-3 1/2in. CAL	B&B
TOS	37	THUJA OCCIDENTALIS 'NIGRA'	DARK AMERICAN ARBORVITAE	4ft.-5ft. Ht.	B&B
QWL	3	QUERCUS X WAREI 'LONG'	REGAL PRINCE OAK - FASTIGIATE FORM	3in.-3 1/2in. CAL	B&B

Habitat Planting

Sym.	Quan.	Botanical Name	Common Name	Size	Root
LS	1	LIQUIDAMBAR STYRACIFLUA	AMERICAN SWEETGUM	3in.-3 1/2in. CAL	B&B
NS	2	NYSSA SYLVATICA	BLACK TUPELO	3in.-3 1/2in. CAL	B&B
QR	1	QUERCUS RUBRA	RED OAK	2in-2 1/2in. CAL	B&B
AMC	6	AMELANCHIER CANADENSIS	SHADBLOW SERVICEBERRY - MULTISTEM SHRUB FORM	4ft.-5ft.	CONT.
CLR	31	CLETHRA ALNIFOLIA 'RUBY SPICE'	RUBY SPICE SUMMERSWEET	24in.-30in. Ht.	CONT.
VB	12	VIBURNUM X BURKWOODII	BURKWOOD VIBURNUM	24in.-30in. Ht.	CONT.
VD	24	VIBURNUM DENTATUM	ARROWWOOD VIBURNUM	24in.-30in. Ht.	CONT.
AP	40	ADIANTUM PEDATUM	MAIDENHAIR FERN		CONT.
DP	20	DENNSTAEDTIA PUNCTILOBULA	HAY SCENTED FERN		CONT.
OC	20	OSMUNDA CINNAMOMEA	CINNAMON FERN		CONT.

RUSSO SURVEYORS • ENGINEERS SERVING CT & MA
J.R. Russo, & Associates, LLC
19 Graham Rd. East, Windsor, CT 06095 • CT 860.623.0569 • MA 413.785.1858
www.jrrusso.com • info@jrrusso.com

LADA, P.C. Land Planners
104 West Street, Simsbury, CT 06070 (860) 651-4971
Brewster, NY 10509 (845) 278-7424
Email: lada@lada-pc.com

REVISIONS

BY: DFM	CHK: TPH

The Learning Experience
Property Of
501 Talcottville Road, LLC
501 Talcottville Road
Vernon, Connecticut 06010
Parcel ID: 09-0007-0001D (Zone: C)

Planting Plan

DATE: 04-06-2022
SCALE: 1"=30'
JOB NUMBER: 2021-083
SHEET: 7 of 12

PERMANENT SEEDING (PS)

SPECIFICATIONS

Time Of Year

Seeding dates in Connecticut are normally April 1 through June 15 and August 15 through October 1. Spring seedings give the best results and spring seedings of all mixes with legumes is recommended. There are two exceptions to the above dates. The first exception is when seedings will be made in the areas of Connecticut known as the Coastal Slope and the Connecticut River Valley. The Coastal Slope includes the coastal towns of New London, Middlesex, New Haven, and Fairfield counties. In these areas, with the exception of crown vetch (when crown vetch is seeded in late summer, at least 35% of the seed should be hard seed (unscarified), the final fall seeding dates can be extended and additional 15 days. The second exception is frost crack or dormant seeding, the seed is applied during the time of year when no germination can be expected, normally November through February. Germination will take place when weather conditions improve, mulching is extremely important to protect the seed from wind and surface erosion and to provide erosion protection until the seeding becomes established.

Site Preparation

Grade in accordance with the Land Grading measure which is in the Connecticut Guidelines For Soil Erosion and Sediment Control latest edition.

Install all necessary surface water controls.

For areas to be mowed remove all surface stones 2 inches or larger. Remove all other debris such as wire, cable tree roots, pieces of concrete, clods, lumps, or other unsuitable material.

Seed Selection

Lawn Areas: Premium Seed Mix for Sun and Shade.
Stormwater Basin: New England Erosion Control/Restoration Mix by New England Wetland Plants, Inc. or approved equal.

Seedbed Preparation

Apply topsoil, if necessary, in accordance with the Topsoiling measure which is in the Connecticut Guidelines For Soil Erosion and Sediment Control latest edition.

Apply ground limestone and fertilizer according to soil test recommendations (such as those offered by the University of Connecticut Soil Testing Laboratory or other reliable source).

Where soil testing is not feasible on small or variable sites, or where timing is critical, fertilizer may be applied at the rate of 300 pounds per acre or 7.5 pounds per 1,000 square feet of 10–10–10 or equivalent and limestone at 4 tons per acre or 200 pounds per 1,000 square feet.

Work lime and fertilizer into the soil to a depth of 3 to 4 inches with a disc or other suitable equipment.

Inspect seedbed just before seeding. If the soil is compacted, crusted or hardened, scarify the area prior to seeding.

Seed Application

Apply selected seed at rates per manufacturer's recommendations uniformly by hand, cyclone seeder, drill, cultipacker type seeder or hydroseeder (slurry including seed, fertilizer). Normal seeding depth is from 0.25 to 0.5 inch. Increase seeding rates by 10% when hydroseeding or frost crack seeding. Seed warm season grasses during the spring period only.

Mulching

See guidelines in the Mulch For Seed measures.

MAINTENANCE

Inspect temporary soil protection area at least once a week and within 24 hours of the end of a storm with a rainfall amount of 0.5 inch or greater during the first growing season.

Where seed has been moved or where soil erosion has occurred, determine the cause of the failure and repair as needed.

TEMPORARY SEEDING (TS)

SPECIFICATIONS

Site Preparation

Install needed erosion control measures such as diversions, grade stabilization structures, sedimentation basins and grassed waterways in accordance with the approved plan.

Grade according to plans and allow for the use of appropriate equipment for seedbed preparation, seeding, mulch application and mulch anchoring.

Seedbed Preparation

Loosen the soil to a depth of 3–4 inches with a slightly roughened surface. If the area has been recently loosened or disturbed, no further roughening is required. Soil preparation can be accomplished by tracking with a bulldozer, discing harrowing, raking or dragging with a section of chain link fence.

Apply ground limestone and fertilizer according to soil test recommendations (such as those offered by the University of Connecticut Soil Testing Laboratory or other reliable source).

If soil testing is not feasible on small or variable sites, or where timing is critical, fertilizer may be applied at the rate of 300 pounds per acre or 7.5 pounds per 1,000 square feet of 10–10–10 or equivalent.

Seeding

Apply seed uniformly by hand, cyclone seeder, drill, cultipacker type seeder or hydroseeder. The temporary seed shall be Rye (grain) applied at a rate of 120 pounds per acre. Increase seeding rates by 10% when hydroseeding.

Mulching

See guidelines in the Mulch For Seed measures.

MAINTENANCE

Inspect temporary seeding area at least once a week and within 24 hours of the end of a storm with a rainfall amount of 0.5 inch or greater for seed and mulch movement and rill erosion.

Where seed has been moved or where soil erosion has occurred, determine the cause of the failure and repair as needed.

MULCH FOR SEED (MS)

SPECIFICATIONS

Materials

Types of Mulches *within this specification include, but are not limited to:*

1. Hay: *The dried stems and leafy parts of plants cut and harvested, such as alfalfa, clovers, other forage legumes and the finer stemmed, leafy grasses. The average stem length should not be less than 4 inches. Hay that can be windblown should be anchored to hold it in place.*

2. Straw: *Cut and dried stems of herbaceous plants, such as wheat, barley, cereal rye, or brome. The average stem length should not be less than 4 inches. Straw that can be windblown should be anchored to hold it in place.*

3. Cellulose Fiber: *Fiber origin is either virgin wood, post–industrial/pre–consumer wood or post consumer wood complying with materials specification (collectively referred to as "wood fiber"), newspaper, kraft paper, cardboard (collectively referred to as "paper fiber") or a combination of wood and paper fiber. Paper fiber, in particular, shall not contain boron, which inhibits seed germination. The cellulose fiber must be manufactured in such a manner that after the addition to and agitation in slurry tanks with water, the fibers in the slurry become uniformly suspended to form a homogeneous product. Subsequent to hydraulic spraying on the ground, the mulch shall allow for the absorption and percolation of moisture and shall not form a tough crust such that it interferes with seed germination or growth. Generally applied with tackifier and fertilizer. Refer to manufacturer's specifications for application rates needed to attain 80%–95% coverage without interfering with seed germination or plant growth. Not recommended as a mulch for use when seeding occurs outside of the recommended seeding dates.*

Tackifiers *within this specification include, but are not limited to: Water soluble materials that cause mulch particles to adhere to one another, generally consisting of either a natural vegetable gum blended with gelling and hardening agents or a blend of hydrophilic polymers, resins, viscosifiers, sticking aids and gums. Good for areas intended to be mowed. Cellulose fiber mulch may be applied as a tackifier to other mulches, provided the application is sufficient to cause the other mulches to adhere to one another.* ***Emulsified asphalts are specifically prohibited for use as tackifiers due to their potential for causing water pollution following its application.***

Nettings *within this specification include, but are not limited to: Prefabricated openwork fabrics made of cellulose cords, ropes, threads, or biodegradable synthetic material that is woven, knotted or molded in such a manner that it holds mulch in place until vegetation growth is sufficient to stabilize the soil. Generally used in areas where no mowing is planned.*

Site Preparation

Grade according to plans and allow for the use of appropriate equipment for seedbed preparation, seeding, mulch application and mulch anchoring.

Application

Timing: *Applied immediately following seeding. Some cellulose fiber may be applied with seed to assist in marking where seed has been sprayed, but expect to apply a second application of cellulose fiber to meet the requirements of* ***Mulch For Seed*** *in the Connecticut Guidelines For Soil Erosion and Sediment Control latest edition.*

Spreading: *Mulch material shall be spread uniformly by hand or machine resulting in 80%–95% coverage of the disturbed soil when seeding within the recommended seeding dates. Applications that are uneven can result in excessive mulch smothering the germinating seeds. For hay or straw anticipate an application rate of 2 tons per acre. For cellulose fiber follow manufacture's recommended application rates to provided 80%–95% coverage.*

When seeding outside the recommended seeding dates, increase mulch application rate to provide between 95%–100% coverage of the disturbed soil. For hay or straw anticipate an application rate to 2.5 to 3 tons per acre.

When spreading hay mulch by hand, divide the area to be mulched into approximately 1,000 square feet and place 1.5–2 bales of hay in each section to facilitate uniform distribution.

For cellulose fiber mulch, expect several spray passes to attain adequate coverage, to eliminate shadowing, and to avoid slippage.

Anchoring: *Expect the need for mulch anchoring along the shoulders of actively traveled roads, hill tops and long open slopes not protected by wind breaks.*

When using netting, the most critical aspect is to ensure that the netting maintains substantial contact with the underlying mulch and the mulch, in turn, maintains continuos contact with the soil surface. Without such contact, the material is useless and erosion can be expected to occur.

MAINTENANCE

Inspect mulch for seed area at least once a week and within 24 hours of the end of a storm with a rainfall amount of 0.5 inch or greater until the grass has germinated to determine maintenance needs.

Where mulch has been moved or where soil erosion has occurred, determine the cause of the failure and repair as needed.

SOIL ERSOION & SEDIMENT CONTROL NOTES

1. *The contractor/developer shall notify the Town Staff prior to construction in accordance with the local approvals and permits.*
2. *All soil erosion and sediment control work shall be done in strict accordance with the Connecticut Guidelines For Soil Erosion and Sediment Control latest edition.*
3. *Any additional erosion/sediment control deemed necessary by the engineer during construction, shall be installed by the developer. In addition, the developer shall be responsible for the repair/replacement and/or maintenance of all erosion control measures until all disturbed areas are stabilized to the satisfaction of the town staff.*
4. *All soil erosion and sediment control operations shall be in place prior to any grading operations and installation of proposed structures or utilities and shall be left in place until construction is completed and/or area is stabilized.*
5. *In all areas, removal of trees, bushes and other vegetation as well as disturbance of the soil is to be kept to an absolute minimum while allowing proper development of the site. During construction, expose as small an area of soil as possible for as short a time as possible.*
6. *The developer shall practice effective dust control per the soil conservation service handbook during construction and until all areas are stabilized or surface treated. The developer shall be responsible for the cleaning of nearby streets of any debris from these construction activities.*
7. *All fill areas shall be compacted sufficiently for their intended purpose and as required to reduce slipping, erosion or excess saturation. Fill intended to support buildings, structures, conduits, etc., shall be compacted in accordance with local requirements or codes.*
8. *Topsoil is to be stripped and stockpiled in amounts necessary to complete finished grading of all exposed areas requiring topsoil. The stockpiled topsoil is to be located as designated on the plans. Topsoil shall not be placed while in a frozen or muddy condition, when the subgrade is excessively wet, or in a condition that may otherwise be detrimental to proper grading or proposed sodding or seeding.*
9. *Any and all fill material is to be free of brush, rubbish, timber, logs vegetative matter and stumps in amounts that will be detrimental to constructing stable fills. Maximum side slopes of exposed surfaces of earth to be 3:1 or as otherwise specified by local authorities.*
10. *Soil stabilization should be completed within 5 days of clearing or inactivity in construction.*
11. *Waste Materials – All waste materials (including wastewater) shall be disposed of in accordance with local, state and federal law. Litter shall be picked up at the end of each work day.*
12. *The Contractor shall maintain on–site additional erosion control materials as a contingency in the event of a failure or when required to shore up existing BMPs. At a minimum, the on–site contingency materials should include 30 feet of silt fence and 5 straw haybales with 10 stakes.*

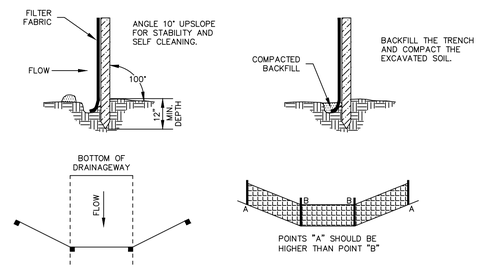

PLAN VIEW

ELEVATION

SOURCE: U.S. DEPARTMENT OF AGRICULTURE, SOIL CONSERVATION SERVICE, STORRS, CONNECTICUT

GEOTEXTILE SILT FENCE (GSF)

NOT TO SCALE

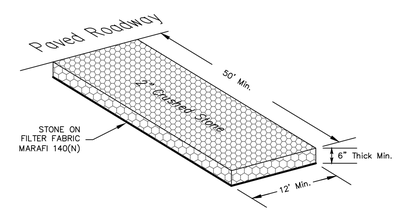

ANTI-TRACKING EXIT PAD DETAIL (CE)

NOT TO SCALE

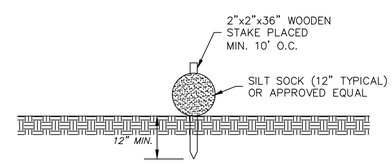

NOTE: MAY BE USED AS ALTERNATIVE TO GEOTEXTILE SILT FENCE.

PERIMETER SEDIMENT BARRIER

NOT TO SCALE

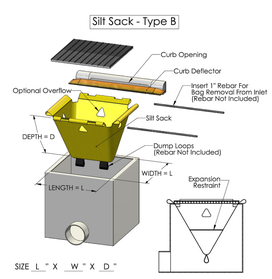

2831 Cardwell Road
Richmond, VA 23234
WWW.ACFENVIRONMENTAL.COM

NOTE:
SILT SACK SHALL BE SIZED TO FIT EACH INLET GRATE (SINGLE OR DOUBLE) AND SHALL BE CLEANED AND MAINTAINED UNTIL THE CONTRIBUTING WATERSHED IS STABILIZED WITH VEGETATION AND/OR COMPACTED PROCESSED STONE BASE.

CB GRATE INLET PROTECTION (SILT SACK)

NOT TO SCALE

CHECKLIST FOR EROSION CONTROL PLAN

PROJECT: The Learning Experience Academy of Education

LOCATION: 501 Talcottville Road, Vernon, CT

PROJECT DESCRIPTION: Construction of a Daycare Facility

PARCEL AREA: 2.0 acres

RESPONSIBLE PERSONNEL: Eric Spungin (860) 989–9494

EROSION AND SEDIMENT CONTROL PLAN PREPARER: J.R. Russo & Associates, LLC

CHECKLIST:

Work Description Erosion & Sediment Control Measures	Location	Date Installed	Initials	Date Removed	Initials
Install construction entrance	As shown on plan.				
Install perimeter sediment barriers	As shown on plan.				
Install inlet protection at CBs	As installed				

MAINTENANCE OF MEASURES:

Location	Description or Number	Date	Initials

Project Dates:

Date of groundbreaking for project:

Date of final stabilization:

PROJECT NARRATIVE AND CONSTRUCTION SEQUENCE

This project is located at 501 Talcottville Road in Vernon, Connecticut. The proposed activity is the construction of a 10,000 square foot daycare facility. The suggested schedule of construction is as follows:

1. Install construction anti–tracking pad (CE).
2. Install sediment barriers (GSF) at project perimeters.
3. Strip topsoil. Stockpile suitable amount of topsoil for reuse on–site in areas shown. Stockpiles shall be surrounded by sediment barriers (GSF).
4. Install retaining walls. Place and compact fill to establish subgrades coincident with retaining wall construction.
5. Begin building construction.
6. Construction stormwater management basin, excavate wetland creation area, and install drainage. Seed basin and wetland creation areas as soon as practicable.
7. Install other site utilities.
8. Install parking lot and driveway base.
9. Install concrete sidewalks and dumpster pad.
10. Pave binder course.
11. Stabilize remaining areas to receive topsoil and permanently seed as soon as possible.
12. Install landscaping & wetland enhancement plantings.
13. Install pavement top course in all areas. Sweep binder course and apply tack coat prior to placing pavement top course.
14. Apply paint striping.
15. Remove sediment barriers after site is fully stabilized.

Construction of this site is anticipated to begin in the spring of 2022 and be complete by January 2023, pending approvals. Temporary erosion control measures shall be installed prior to any soil disturbance and maintained throughout construction until soils have been stabilized with permanent vegetation.

The Contractor shall keep the area of disturbance to a minimum and establish vegetative cover on exposed soils as soon as practical. All soil and erosion control measures shall be installed and maintained in accordance with these plans and the "Connecticut DEP Guidelines for Soil Erosion and Sediment Control", as amended. The Contractor shall verify all conditions noted on the plans and shall immediately notify the Engineer of any discrepancies.

The developer shall be responsible for the repair/replacement/maintenance of all erosion control measures until all disturbed areas are stabilized. Accumulated sediment shall be removed as required to keep silt fence functional. In all cases, deposits shall be removed when the accumulated sediment has reached one–half above the ground height of the silt fence. This material is to be spread and stabilized in areas not subject to erosion, or to be used in areas which are not to be paved or built on. Silt fence (GSF) is to be replaced as necessary to maintain proper filtering action. Silt fence (GSF) are to remain in place and shall be maintained to insure efficient sediment capture until all areas above the erosion checks are stabilized and vegetation has been established.

POST CONSTRUCTION MAINTENANCE NOTES:

The property owner shall be responsible for performing the following post construction maintenance schedule:

1. Maintain lawn & landscape areas with minimal pesticides.
2. Sweep parking lot and paved areas at least once per year in the spring.
3. Inspect catch basins and storm manholes at least twice per year, including after sweeping. Clean at least once per year in April and as necessary to prevent the discharge of pollutants from structures. Remove accumulated oil, trash and excessive sediment with vac–truck. Check condition of hoods (if applicable).
4. Inspect infiltration basin annually for evidence of hydrocarbons and remove by vac–truck. Repair eroded areas and replace riprap and vegetation as required. Dredge bottom of forebay to remove accumulated sediment every 10 years or when significant volume reduction is observed. Mow infiltration basin on a regular basis to maintain as lawn area for filtering of pollutants. Inspect inlet pipes monthly and remove trash and debris as needed.

RUSSO
SURVEYORS • ENGINEERS
SERVING CT & MA
J.R. Russo & Associates, LLC
1 Shoreham Rd East Windsor CT 06088 • CT 8606331569 • MA 4437851158
www.jrrusso.com • info@jrrusso.com

Applicant
Vernon Development LLC
56 East Main Street
Avon, Connecticut 06001

REVISIONS	
3–17–2022	TALCOTTVILLE ROAD ENTRANCE
2–14–2022	PAGE NUMBERS

BY: LF/TAC CHK: JEU

The Learning Experience
Property Of
501 Talcottville Road, LLC
501 Talcottville Road
Vernon, Connecticut 06010
Parcel ID: 09–0007–0001D (Zone: C)

Erosion & Sediment Control Notes
(ALT 1)

DATE
1–11–22

SCALE
1"=20'

JOB NUMBER
2021–083

SHEET
8 of 12

S:\Acad\2021 Civil 3D\2021-083 Vernon Development - 501 Talcottville Rd\Russo Drawings\2021-083 A.dwg

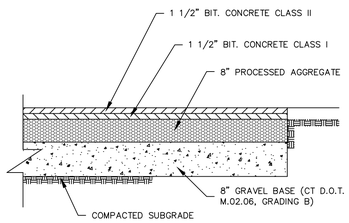

NOTE: WHERE SUBGRADES ARE ON WET SILT OR CLAY, CONTRACTOR TO INSTALL ADDITIONAL 12" OF 3/4" CRUSHED STONE ON TENSAR TRIAX GEOGRID BELOW GRAVEL SUBBASE.

PAVEMENT DETAIL

NOT TO SCALE

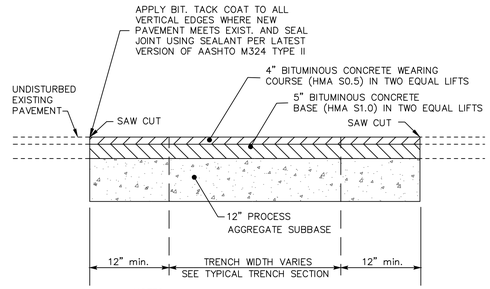

NOTES:
1. All saw cut and sealed joints to be wither parallel with, or perpendicular to, the center-line of the pipe.
2. All materials are to meet Conn. D.O.T. Form 817, latest edition.
3. Pavement materials shall be provided by the same vendor.

PERMANENT PAVEMENT PATCH (STATE HIGHWAY)

NOT TO SCALE

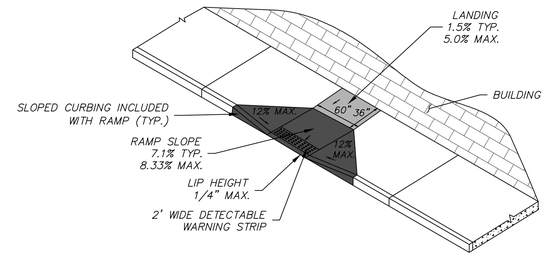

SIDEWALK RAMP (TYPE A)

NOT TO SCALE

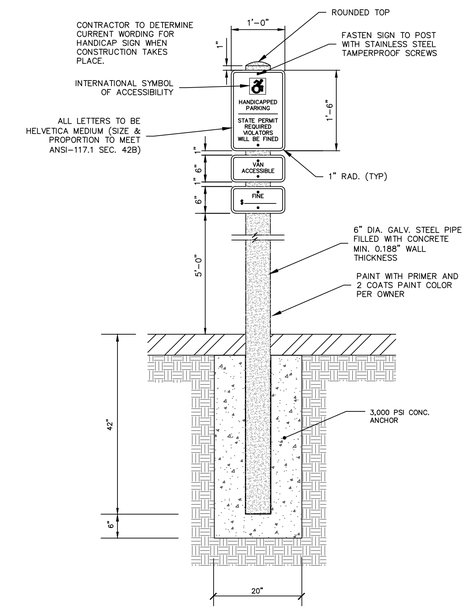

HANDICAP SIGN & BOLLARD

NOT TO SCALE

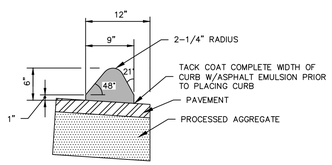

BITUMINOUS CONCRETE LIP CURBING

NOT TO SCALE

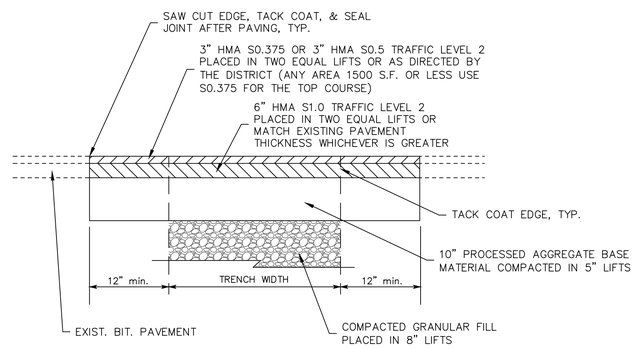

PERMANENT PAVEMENT PATCH (STATE HIGHWAY)

NOT TO SCALE

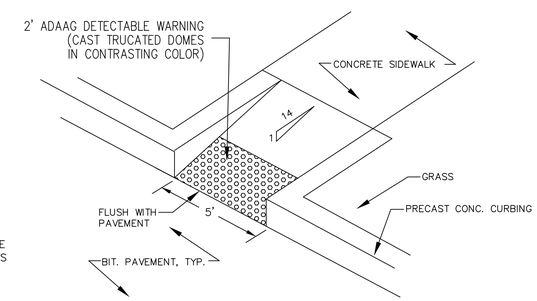

SIDEWALK RAMP (TYPE B)

NOT TO SCALE

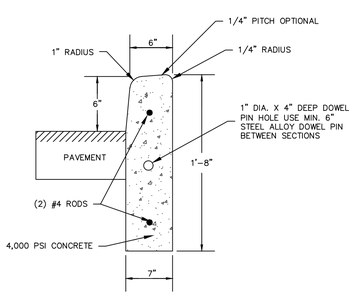

NOTE:
1. SPACE JOINTS 10'±, BUT NO LESS THAN 6'.

PRE-CAST CONCRETE CURB

NOT TO SCALE

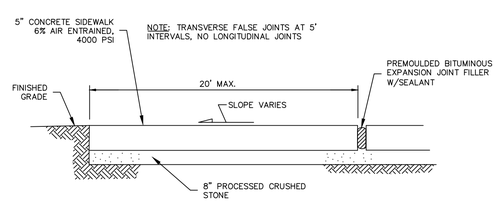

NOTE: EXPANSION JOINTS TO BE PLACED BETWEEN ADJACENT SLABS, AT BUILDING LINE, AT CURBS, OR AT PENETRATING STRUCTURES.

TYPICAL SIDEWALK DETAIL

NOT TO SCALE

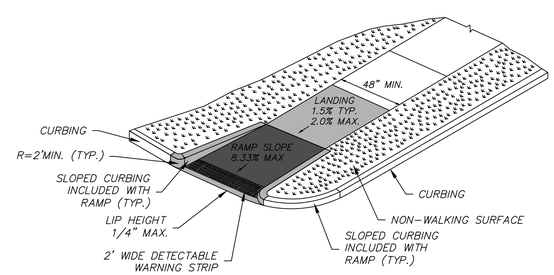

SINGLE DIRECTION – RETURN CURB WITH NON-WALKING SURFACE

DOT SIDEWALK RAMP (TYPE 16)

NOT TO SCALE

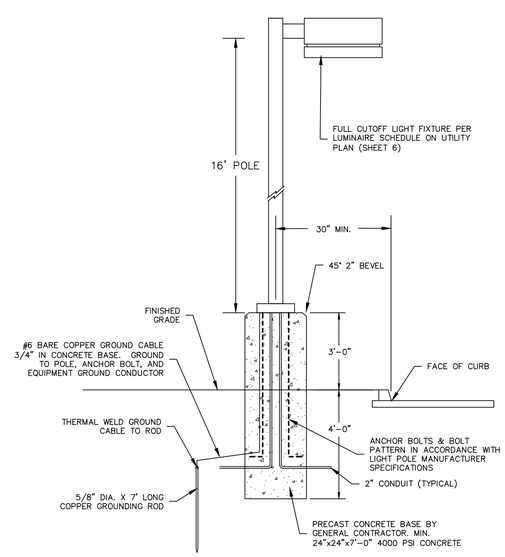

POLE MOUNTED EXTERIOR LIGHT

NOT TO SCALE

RUSSO
SURVEYORS • ENGINEERS
SERVING CT & MA
J.R. Russo & Associates, LLC
1 Shoham Rd East • Windsor, CT 06095 • CT: 860.602.0369 • MA: 413.785.1158
www.jrrussoconn.com • info@jrrussoconn.com

Applicant
Vernon Development LLC
56 East Main Street
Avon, Connecticut 06001

REVISIONS		
3-17-2022	TALCOTTVILLE ROAD ENTRANCE	
2-14-2022	PAGE NUMBERS	
BY: LF/TAC	CHK: JEU	

The Learning Experience
Property Of
501 Talcottville Road, LLC
501 Talcottville Road
Vernon, Connecticut 06010
Parcel ID: 09-0007-0001D (Zone: C)

Details
(ALT 1)

DATE
1-11-22

SCALE
1"=20'

JOB NUMBER
2021-083

SHEET
9 of 12

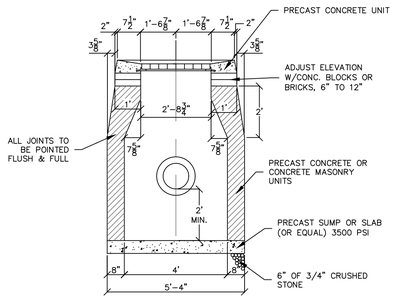

FRONT ELEVATION

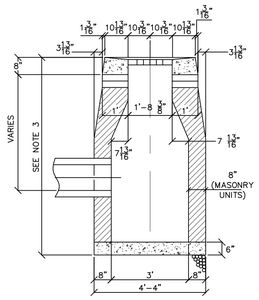

SIDE ELEVATION

NOTES:
1. MINIMUM COVER OVER TOP OF PIPE SHALL BE 1'-0".
2. WALL THICKNESS SHALL BE SUFFICIENT TO MEET HS 20 LOADING.
3. WALL THICKNESS FOR STRUCTURES OVER 10' HIGH IS 12" FOR CONCRETE BLOCK UNITS, INSIDE DIMENSIONS REMAIN THE SAME.
4. ALL PIPES SHALL BE CUT FLUSH WITH INSIDE WALLS.
5. ALL BRICKS SHALL BE CONCRETE.

TYPE "CL" CATCH BASIN

NOT TO SCALE

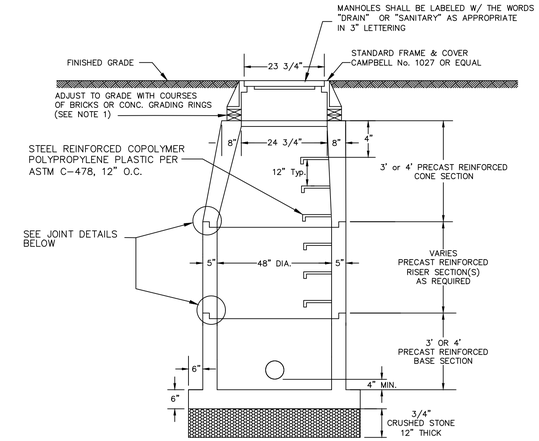

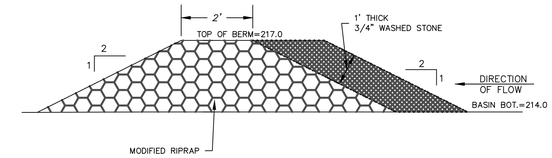

STONE FILTER BERM

NOT TO SCALE

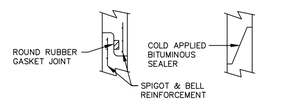

NOTES:
1. MINIMUM COVER OVER TOP OF PIPE SHALL BE 2'-0" UNLESS OTHERWISE APPROVED BY THE ENGINEER.
2. TOP STEP TO BE A MAXIMUM OF 24" BELOW TOP OF MANHOLE FRAME & COVER.
3. WALL THICKNESS SHALL BE SUFFICIENT TO MEET HS 20 LOADING.
4. MANHOLE INSIDE DIAMETER MAY BE INCREASED AS DIRECTED BY THE ENGINEER TO ACCOMMODATE SIZE AND NUMBER OF PIPES. INCREASE WALL THICKNESS 1" FOR EACH 1 FT. OF INSIDE DIAMETER INCREASE.
5. FOR SHALLOW STRUCTURES, USE 8" SLAB IN PLACE OF CONE SECTION.
6. ALL PIPES SHALL BE CUT FLUSH WITH INSIDE WALLS.
7. FILL LIFTING HOLES WITH MORTAR.

PRECAST CONCRETE MANHOLE

NOT TO SCALE

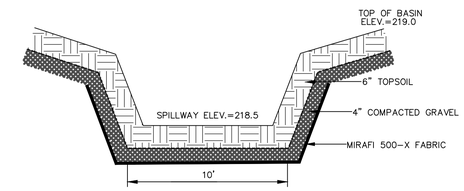

EARTHEN SPILLWAY

NOT TO SCALE

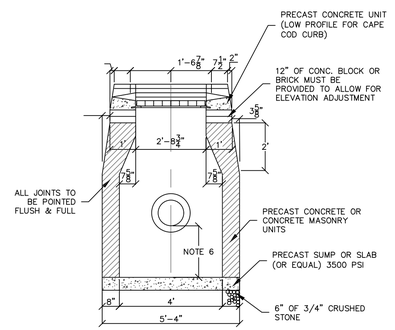

FRONT ELEVATION

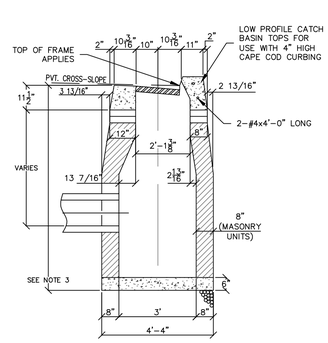

SIDE ELEVATION

NOTES:
1. MINIMUM COVER OVER TOP OF PIPE SHALL BE 2'-0".
2. WALL THICKNESS SHALL BE SUFFICIENT TO MEET HS 20 LOADING.
3. WALL THICKNESS FOR STRUCTURES OVER 10' HIGH IS 12" FOR CONCRETE BLOCK UNITS, INSIDE DIMENSIONS REMAIN THE SAME.
4. ALL PIPES SHALL BE CUT FLUSH WITH INSIDE WALLS.
5. ALL BRICKS SHALL BE CONCRETE.
6. ALL CATCH BASIN SUMPS SHALL BE MIN. 2' BELOW THE OUTLET INVERT WITH THE EXCEPTION OF CB6 WHICH SHALL HAVE A 4' SUMP.

TYPE "C" CATCH BASIN

NOT TO SCALE

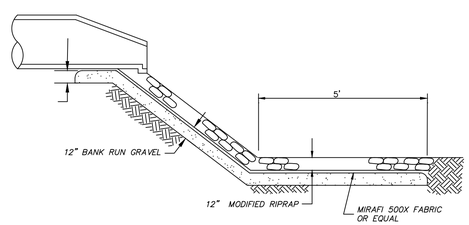

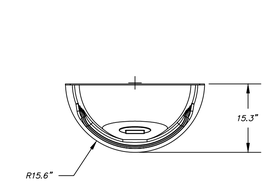

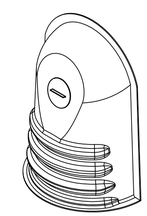

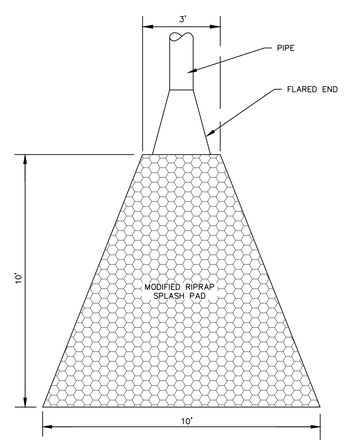

NOTE:
MODIFIED RIPRAP APRON (12" THICK) ON 6" GRANULAR BASE (M.02.01) ON MIRAFI 140N FABRIC OR EQUAL

TYPE A RIPRAP APRON (OP)

N.T.S.

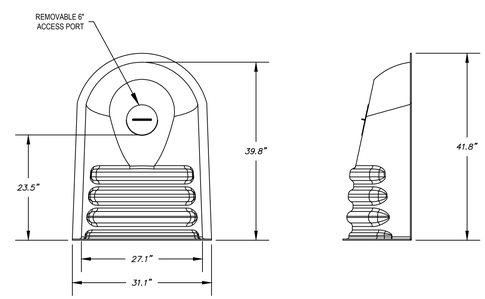

NOTES:
1. HIGH DENSITY POLYETHYLENE NYROPLAST ENVIROHOOD MODEL 24F FOR FLAT CONCRETE STRUCTURES.
2. INSTALL PER MANUFACTURER'S INSTALLATION INSTRUCTIONS.

NYROPLAST ENVIROHOOD DETAIL

NOT TO SCALE

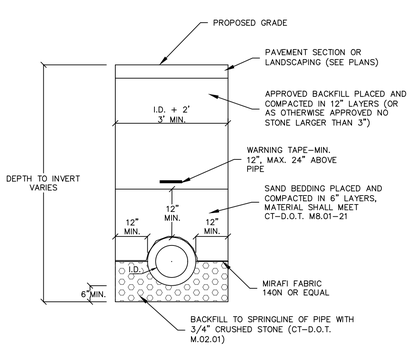

STANDARD STORM DRAIN DETAIL

NOT TO SCALE

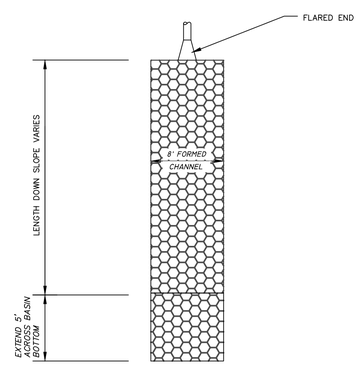

CHANNEL INTO STORMWATER BASIN

NOT TO SCALE

RUSSO
SURVEYORS·ENGINEERS
SERVING CT & MA
J.R. Russo & Associates, LLC
1 Sheham Rd East Windsor, CT 06088 · CT 860.623.0569 · MA 413.785.1158
www.jrrusso.com · info@jrrusso.com

Applicant
Vernon Development LLC
56 East Main Street
Avon, Connecticut 06001

3-17-2022	TALCOTTVILLE ROAD ENTRANCE	
2-14-2022	PAGE NUMBERS	

REVISIONS

BY: LF/TAC | CHK: JEU

The Learning Experience
Property Of
501 Talcottville Road, LLC
501 Talcottville Road
Vernon, Connecticut 06010
Parcel ID: 09-0007-0001D (Zone: C)

Details
(ALT 1)

DATE
1-11-22

SCALE
1"=20'

JOB NUMBER
2021-083

SHEET
10 of 12

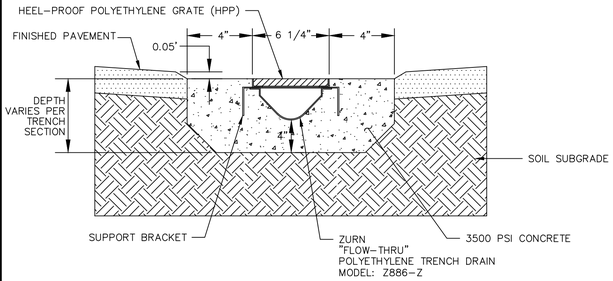

NOTE:
1. USE CHANNELS NO. 8601 – 8615 FOR 120' TRENCH LENGTH
2. CONNECT TRENCH TO OUTLET PIPE WITH U6 OUTLET ADAPTER AND 6" SCH40 PVC WITH 90° BEND.
3. SET CONCRETE, FRAME & GRATE SYSTEM 0.05' BELOW FINISHED PAVEMENT GRADE, AS SHOWN ABOVE.

TRENCH DRAIN DETAIL

NOT TO SCALE

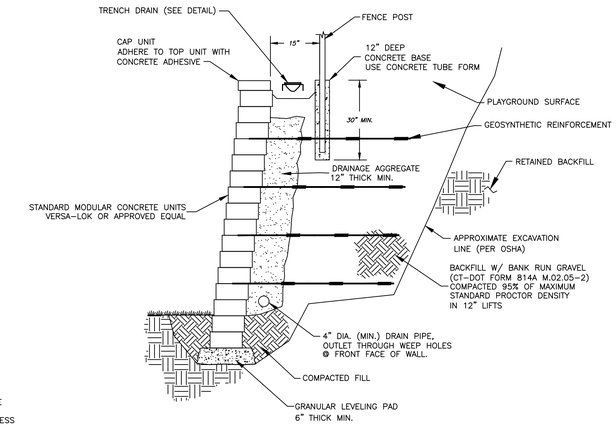

NOTE: CONTRACTOR TO OBTAIN FINAL WALL DESIGN PLANS PREPARED BY PROFESSIONAL ENGINEER LICENSED IN CT. FINAL SHOP DRAWINGS TO BE SUBMITTED TO SITE ENGINEER FOR APPROVAL.

TYPICAL SECTION REINFORCED RETAINING WALL

NOT TO SCALE

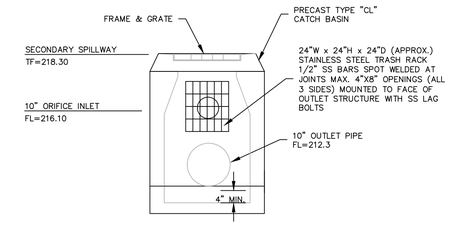

FRONT VIEW

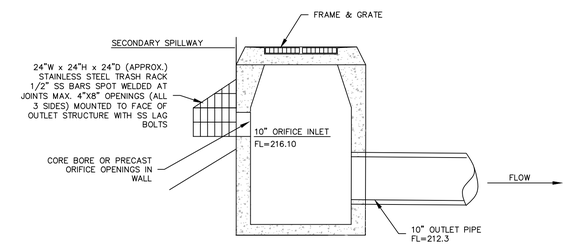

SIDE SECTION VIEW

BASIN OUTLET STRUCTURE

NOT TO SCALE

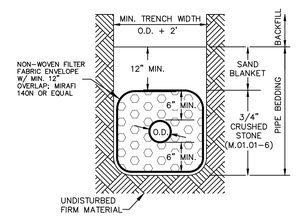

NOTES:
1. PROVIDE WARNING TAPE, 12-24" ABOVE TOP OF PIPE.
2. BACKFILL SHALL BE SUITABLE NATIVE MATERIAL UNLESS DETERMINED TO BE UNSUITABLE BY THE ENGINEER OR GRANULAR FILL M.02.01 PLACED AND COMPACTED IN 12" LOOSE LIFTS.
3. UNDER PAVED AREAS COMPACT BACKFILL TO 95% OF THE MATERIAL'S MAXIMUM DRY DENSITY AS DETERMINED BY A STANDARD PROCTOR TEST. UNDER UNPAVED AREAS COMPACT TO 90%.
4. UNSUITABLE TRENCH MATERIAL TO BE REMOVED AND REPLACED WITH 3/4" CRUSHED STONE AS DIRECTED BY ENGINEER.

TYPICAL SANITARY SEWER TRENCH SECTION

NOT TO SCALE

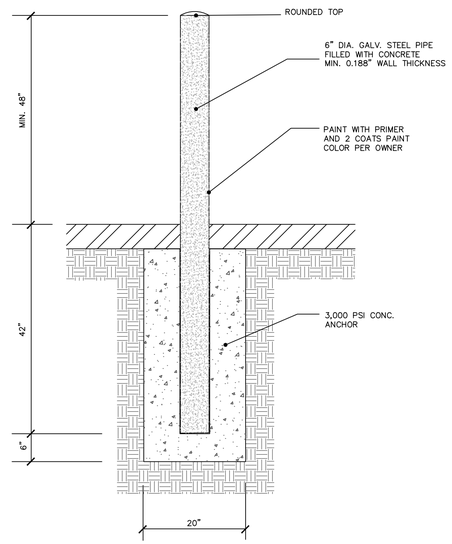

PIPE BOLLARD

NOT TO SCALE

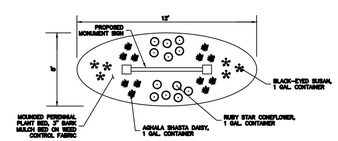

MONUMENT SIGN ISLAND

NOT TO SCALE

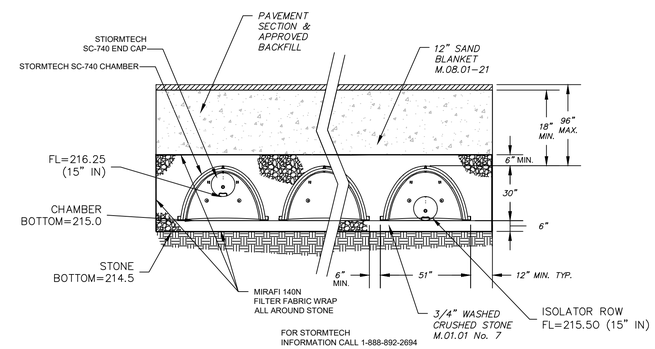

TYPICAL SECTION

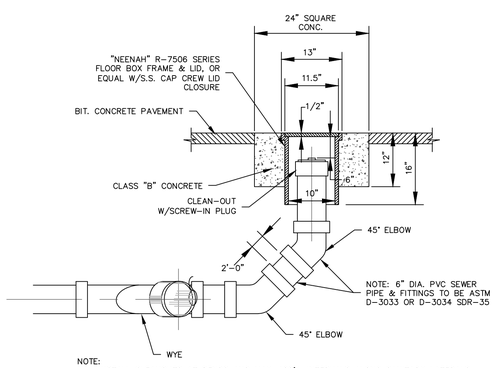

NOTE:
1. INSTALL CLEANOUTS AT BENDS AND MAX. 100'± INTERVALS ALONG SANITARY LATERALS.

CLEAN-OUT

NOT TO SCALE

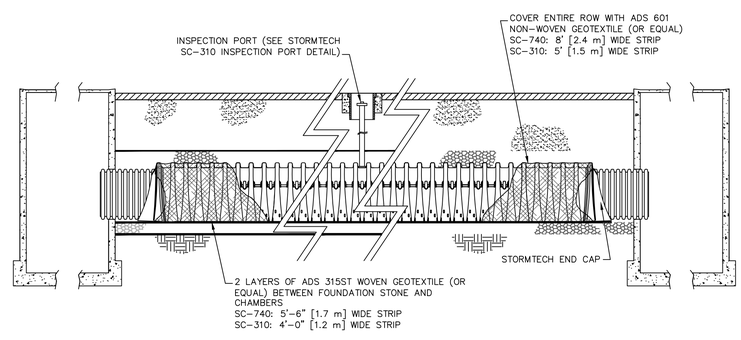

STORMTECH ISOLATOR ROW PROFILE

NOT TO SCALE

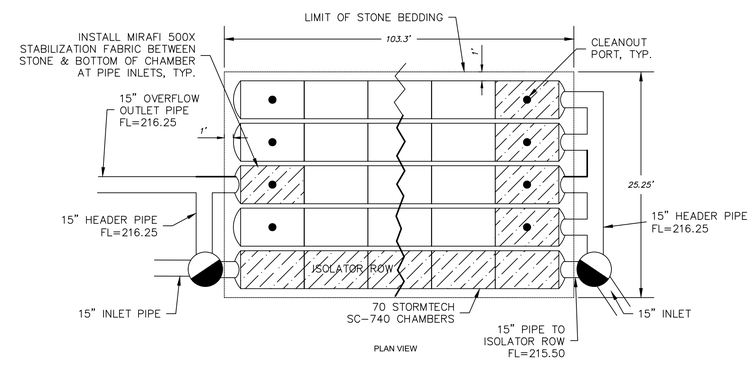

PLAN VIEW

STORMTECH CHAMBER SUBSURFACE DETENTION SYSTEM

NOT TO SCALE

RUSSO
SURVEYORS·ENGINEERS
SERVING CT & MA
J.R. Russo & Associates, LLC
1 Shoham Rd East Windsor, CT 06088 • CT 860.623.0969 • MA 413.785.158
www.russo.com • info@jrrusso.com

Applicant
Vernon Development LLC
56 East Main Street
Avon, Connecticut 06001

3-17-2022	TALCOTTVILLE ROAD ENTRANCE	
2-14-2022	PAGE NUMBERS, ADD OUTLET STRUCTURE	

REVISIONS

BY: LF/TAC | CHK: JEU

The Learning Experience
Property Of
501 Talcottville Road, LLC
501 Talcottville Road
Vernon, Connecticut 06010
Parcel ID: 09-0007-0001D (Zone: C)

Details
(ALT 1)

DATE
1-11-22

SCALE
1"=20'

JOB NUMBER
2021-083

SHEET
11 of 12

S:\Acad\2021 Civil 3D\2021-083 Vernon Development - 501 Talcottville Rd\Russo Drawings\2021-083 A.dwg

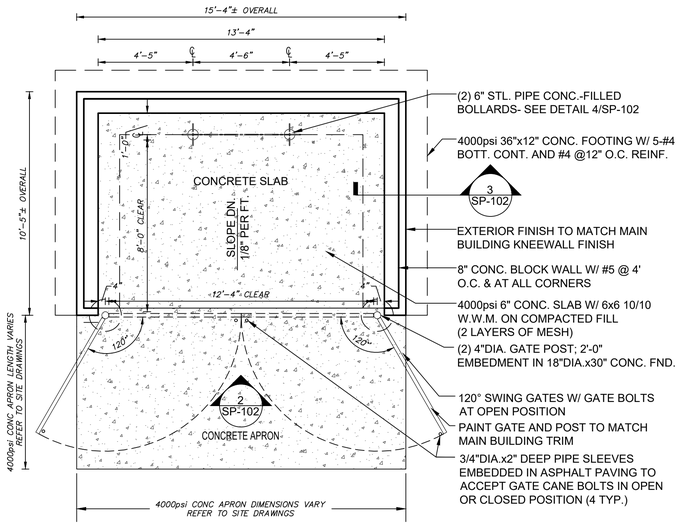

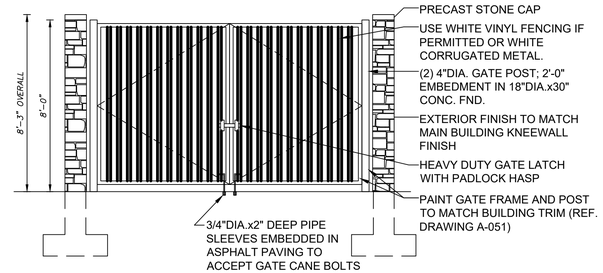

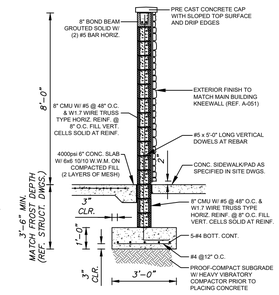

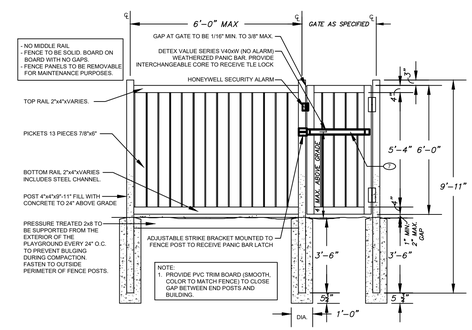

2 TYP. PVC FENCE AND GATE WITH PANIC HARDWARE
SCALE 1/2" = 1'-0"

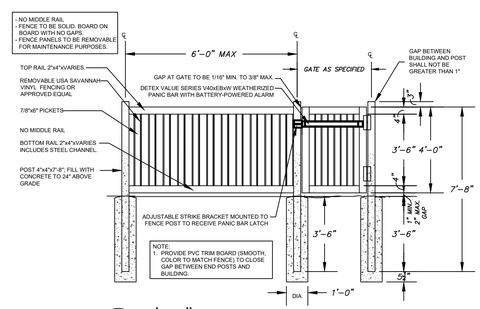

3 4'-0" PVC FENCE AND GATE DETAIL
SCALE 1/2" = 1'-0"

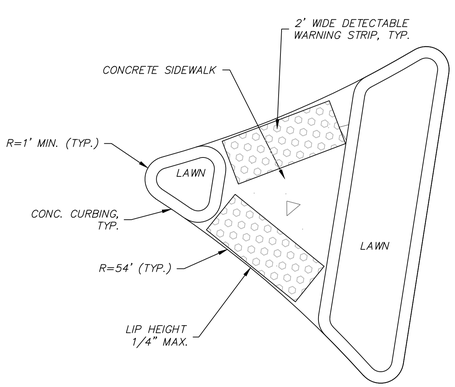

RAISED ISLAND W/ PEDESTRIAN CUT THROUGH

NOT TO SCALE

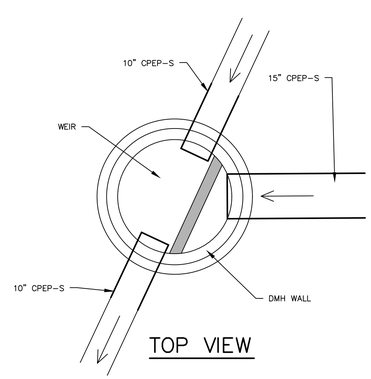

DMH #3 CONNECTION DETAIL

NOT TO SCALE

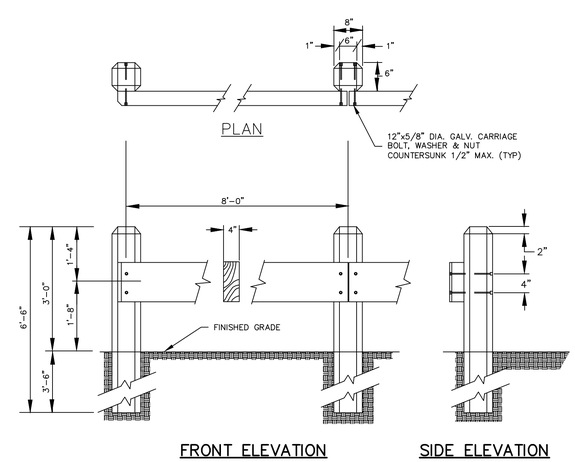

WOOD GUIDERAIL

N.T.S.

TABLES OF PLANTING MATERIALS FOR WETLAND CREATION & ENHANCEMENT AREAS
501 TALCOTVILLE ROAD, VERNON, CONNECTICUT

Table 1. Shrubs

Scientific Name	Zone	Common Name	Size	Shade tolerant?	Wetland Creation Area	Wetland Enhancement Area	Totals
SHRUBS							
Photinia pyrifolia	C	Chokeberry	3'-4'	N	0	4	4
Clethra alnifolia	B,C	Sweet pepperbush	3'-4'	Y	4	0	4
Ilex verticillata	A,B,C	Winterberry	3'-4'	Y	3	2	5
Sambucus nigra	B	Common elderberry	3'-4'	N	0	2	2
Swida amomum	B,C	Silky dogwood	3'-4'	N	0	3	3
Swida racemosum	B,C	Gray dogwood	3'-4'	Y	5	2	7
Vaccinium corymbosum	B,C	Highbush blueberry	3'-4'	Y	2	0	2
Viburnum cassinoides	B	Wild raisin	3'-4'	Y	2	0	2
Viburnum opulus	B,C	Cranberry viburnum	3'-4'	Y	0	3	3
Totals:					***16***	***16***	32

Table 2. Herbs

Hydrologic Zones: Zone A: Saturated/Shallow inundation; **Zone B:**temporary saturation/flooding;
Zone C: moist, poorly to moderately well drained

Scientific Name	Zone	Common Name	Form	NWI*	Spacing	Wetland Creation Area	Wetland Enhancement Area	Totals
Asclepias incarnata	B, C	Swamp milkweed	2"plug	OBL	2'OC	10	40	**50**
Carex crinita	A, B	Fringed sedge	2"plug	OBL	2'OC	25	25	**50**
Osmundastrum cinnamomeum	B, C	Cinnamon fern	#1 pot	FACW	2'OC	5	5	**10**
Eutrochium maculatum	B	Spotted Joe Pye weed	2" plug	FACW	1.5'OC	10	40	**50**
Carex lupulina	A, B	Hop sedge	2" plug	FACW+	2'OC	10	40	**50**
Total:						***60***	***150***	210

Seed Mix to be applied at Wetland Creation Area *: New England Wetmix at 1lb/2,500 sq. ft. (Supplier: New England Wetland Plants, Inc.)*

RUSSO
SURVEYORS • ENGINEERS
SERVING CT & MA
J.R. Russo & Associates, LLC
1 Shoham Rd East • Windsor, CT 06095 • CT: 860.623.0969 • MA: 413.785.158
www.jrrusso.com • info@jrrusso.com

Applicant
Vernon Development LLC
56 East Main Street
Avon, Connecticut 06001

REVISIONS	
3-17-2022	TALCOTTVILLE ROAD ENTRANCE
BY: LF/TAC	CHK: JEU

The Learning Experience
Property Of
501 Talcottville Road, LLC
501 Talcottville Road
Vernon, Connecticut 06010
Parcel ID: 09-0007-0001D (Zone: C)

Details
(ALT 1)

DATE
2-14-22
SCALE
1"=20'
JOB NUMBER
2021-083
SHEET
12 of 12