NOT FOR CONSTRUCTION
03.17.2021 - BID

REHABILITATION of

CITIZENS BLOCK

28-34 PARK PLACE, VERNON CT

PHASE II: ENTRANCE ADDITION - EXTERIOR SHELL

ARCHITECT

THE ARCHITECTS

Robert B. Hurd, AIA
56 Arbor Street
Hartford, CT 06106
Tel: 860-232-2707

Crosskey Architects LLC

750 Main Street, Hartford, CT 06103
T: (860)724-3000 F: (860) 724-3013

CIVIL ENGINEER / LANDSCAPE ARCHITECT

Design Professionals Inc
21 Jeffrey Drive
South Windsor, CT 06074
Tel: (860) 291-8755

STRUCTURAL ENGINEER

Cirrus Structural Engineering LLC
19 Lower Woodland Terrace
Columbia, CT 06237
Tel: (860) 337-0200

MEP ENGINEER

Long Consulting LLC
67 Federal Rd, Building A, Suite 201
Brookfield, CT 06804
Tel: (203) 663-3703

INDUSTRIAL HYGIENIST

Eagle Environmental Inc
8 S Main St. #3
Terryville, CT 06786
Tel: (860) 589-8257

ACCESSIBILITY INFORMATION AND DESIGN

CLEAR FLOOR SPACE

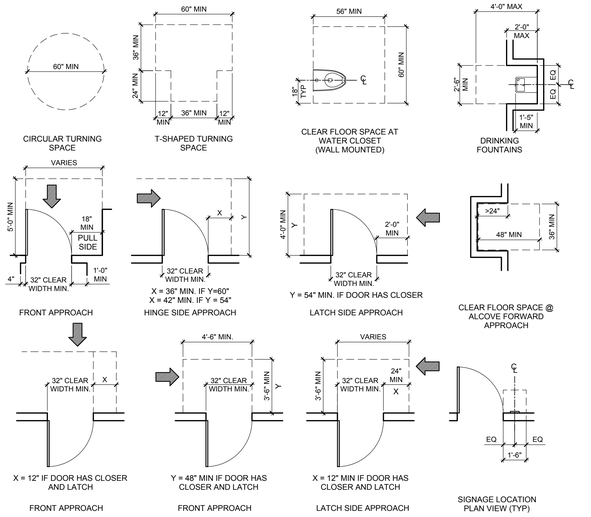

REACH LIMITS

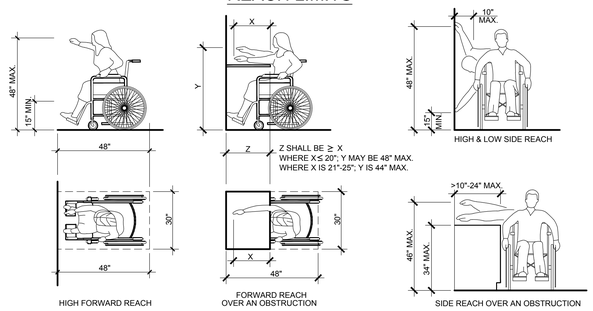

ACCESSIBLE LAVATORY, WATER CLOSET & TOILET STALL

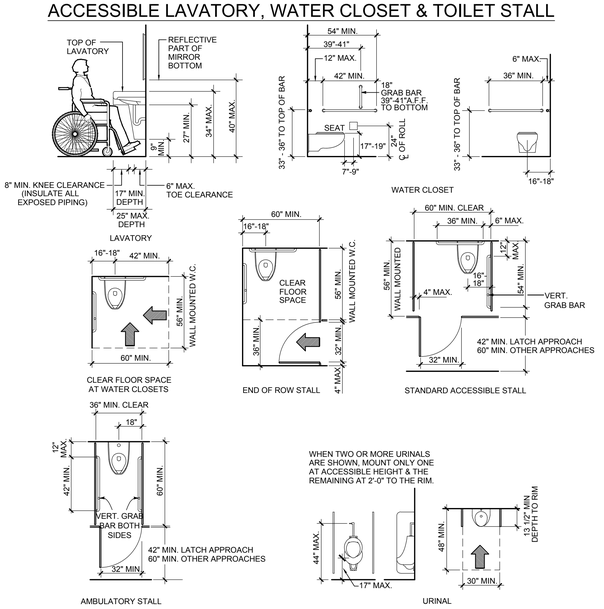

DRAWING SYMBOLS

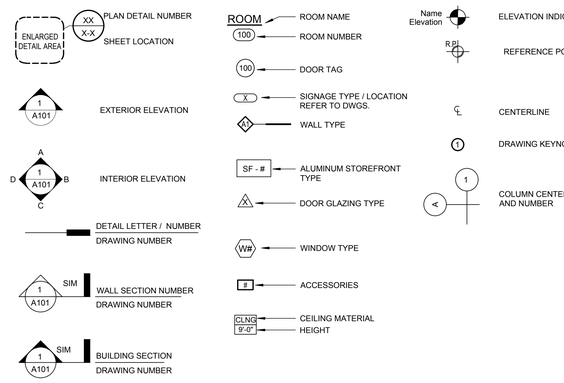

ABBREVIATIONS

A	
&	AND
@	AT
AB	ANCHOR BOLT
AC	AIR CONDITIONING
ACC	ACCESSIBLE
ACOUST	ACOUSTICAL
AD	AREA DRAIN
ADD'L	ADDITIONAL
ADJ	ADJACENT
AFF	ABOVE FINISHED FLOOR
AFG	ABOVE FINISHED GRADE
AGGR	AGGREGATE
ALT	ALTERNATE
ALUM	ALUMINUM
ANOD	ANODIZED
APPROX	APPROXIMATE
ARCH	ARCHITECTURAL
ASPH	ASPHALT
ATTN	ATTENTION
AUTO	AUTOMATIC
AV	AUDIOVISUAL
B	
B	BRICK
BD	BOARD
BIT	BITUMINOUS
BLDG	BUILDING
BLK	BLOCK
BLKG	BLOCKING
BM	BEAM
BO	BOTTOM OF
BOT	BOTTOM
BRG	BEARING
BRKT	BRACKET
BSMNT	BASEMENT
C	
C	CHANNEL
CAB	CABINET
CAT	CATEGORY
CB	CATCH BASIN
CB	CEMENT BOARD
CBU	CEMENTITIOUS BACKER UNIT
CC	CENTER TO CENTER
CCTV	CLOSED CIRCUIT TELEVISION
CEM	CEMENT
CH	CHILLER
CI	CAST IRON
CIP	CAST-IN-PLACE
CJ	CONTROL JOINT
CL	CENTERLINE
CLG	CEILING
CLR	CLEAR
CMU	CONCRETE MASONRY UNIT
CNTR	COUNTER
CO	CLEANOUT
COL	COLUMN
CONC	CONCRETE
COND	CONDITION
CONN	CONNECTION
CONST	CONSTRUCTION
CONT	CONTINUOUS
CONTR	CONTRACTOR
COORD	COORDINATE
CORR	CORRIDOR
CTR	CENTER
CTSK	COUNTERSUNK
CW	COLD WATER
D	
D	DEEP, DEPTH
DBL	DOUBLE
DEG	DEGREE
DEMO	DEMOLITION
DEPT	DEPARTMENT
DF	DRINKING FOUNTAIN
DIA	DIAMETER
DIFF	DIFFUSER
DIM	DIMENSION
DIMS	DIMENSIONS
DISP	DISPENSER
DIV	DIVISION
DMPF	DAMP PROOFING
DN	DOWN
DO	DOOR OPENING
DR	DOOR
DRN	DRAIN
DS	DOWNSPOUT
DTL	DETAIL
DW	DISHWASHER
DWG	DRAWING
DWR	DRAWER
E	
E	EAST
EA	EACH
EB	EXPANSION BOLT
EJ	EXPANSION JOINT
EL	ELEVATION
ELEC	ELECTRICAL
ELEV	ELEVATOR
EMER	EMERGENCY
ENCL	ENCLOSURE
ENG	ENGINEER
EP	ELECTRICAL PANEL
EPDM	ETHYLENE PROPYLENE DIENE M-CLASS
EQ	EQUAL
EQUIP	EQUIPMENT
EXH	EXHAUST
EXIST	EXISTING
EXP	EXPANSION
EXT	EXTERIOR
F	
FA	FIRE ALARM
FB	FACE BRICK
FD	FLOOR DRAIN
FDC	FIRE DEPARTMENT CONNECTION
FE	FIRE EXTINGUISHER
FEC	FIRE EXTINGUISHER CABINET
FF&E	FURNITURE, FIXTURES AND EQUIPMENT
FFB	FLUSH FLOOR BOX
FFE	FINISH FLOOR ELEVATION
FH	FLAT HEAD
FHC	FIRE HOSE CABINET
FIN	FINISH
FIXT	FIXTURE
FLASH	FLASHING
FLR	FLOOR
FLUOR	FLUORESCENT
FND	FOUNDATION
FO	FACE OF
FP	FIRE PROTECTION
FPG	FIREPROOFING
FR	FIRE RESISTANT
FRC	FIBER REINFORCED CONCRETE
FRT	FIRE RETARDANT TREATED
FT	FEET/FOOT
FTG	FOOTING
FURN	FURNITURE
FURR	FURRING
G	
GA	GAUGE
GALV	GALVANIZED
GB	GRAB BAR
GC	GENERAL CONTRACT(OR)
GEN	GENERAL
GFRC	GLASS FIBER REINFORCED CONCRETE
GL	GLASS
GLAZ	GLAZING
GRAN	GRANULAR
GRD	GROUND
GSM	GALVANIZED SHEET METAL
GV	GAS VALVE
GWB	GYPSUM WALL BOARD
GYP	GYPSUM
H	
H	HIGH/HEIGHT
HB	HOSE BIB
HC	HANDICAPPED
HDWD	HARDWOOD
HDWR	HARDWARE
HGT	HEIGHT
HM	HOLLOW METAL
HNDRL	HANDRAIL
HO	HOLD OPEN
HORIZ	HORIZONTAL
HR	HOUR
HRC	HOSE REEL CABINET
HTG	HEATING
HVAC	HEATING VENTILATION AND AIR CONDITIONING
HW	HOT WATER
I	
ID	INSIDE DIAMETER
IN	INCH/INCHES
INCAND	INCANDESCENT
INCL	INCLUDED/INCLUDING
INFO	INFORMATION
INSUL	INSULATION
INT	INTERIOR
INTERM	INTERMEDIATE
INV	INVERT
J	
JST	JOIST
JT	JOINT
K	
KO	KNOCK OUT
L	
LAV	LAVATORY
LB	POUNDS
LLH	LONG LEG HORIZONTAL
LLV	LONG LEG VERTICAL
LT	LIGHT
M	
MAS	MASONRY
MAX	MAXIMUM
MECH	MECHANICAL
MED	MEDIUM
MEMBR	MEMBRANE
MFR	MANUFACTURER
MH	MAN HOLE
MHO	MAGNETIC HOLD-OPEN
MIN	MINIMUM
MISC	MISCELLANEOUS
MO	MASONRY OPENING
MR	MOISTURE RESISTANT
MTD	MOUNTED
MTG	MOUNTING
MTL	METAL
MULL	MULLION
N	
N	NORTH
NA	NOT APPLICABLE
NC	NOISE CRITERIA
NIC	NOT IN CONTRACT
NO	NUMBER
NOM	NOMINAL
NON COMB	NON COMBUSTIBLE
NTS	NOT TO SCALE
O	
OA	OUTSIDE AIR
OC	ON CENTER
OD	OUTSIDE DIAMETER
OD	OVERFLOW DRAIN
OFCI	OWNER FURNISHED, CONTRACTOR INSTALLED
OFOI	OWNER FURNISHED, OWNER INSTALLED
OH	OVERHEAD
OPNG	OPENING
OPP	OPPOSITE
ORD	OVERFLOW ROOF DRAIN
P	
PAV	PAVING
PBD	PARTICLE BOARD
PC	PRECAST
PDF	POWER DRIVEN FASTENER
PERF	PERFORATED
PERIM	PERIMETER
PERP	PERPENDICULAR
PL	PLATE
PLAM	PLASTIC LAMINATE
PLAS	PLASTER
PLBG	PLUMBING
PLF	POUNDS PER LINEAR FOOT
PLYWD	PLYWOOD
PNL	PANEL
PNT	PAINT OR PAINTED
POL	POLISHED
PR	PAIR
PREFAB	PREFABRICATED
PROJ	PROJECT
PSF	POUNDS PER SQUARE FOOT
PT	POINT
PT	PRESSURE TREATED
PTD	PAINTED
PTN	PARTITION
PVC	POLYVINYL CHLORIDE
Q	
QTY	QUANTITY
R	
R	RISER
RA	RETURN AIR
RAD	RADIUS
RD	ROOF DRAIN
REC	RECESSED
RECPT	RECEPTACLE
REF	REFERENCE
REFR	REFRIGERATOR
REG	REGISTER
REINF	REINFORCED
REL	RELOCATE
REM	REMOVABLE
REQOM	RECOMMENDED
REQ	REQUIRE/REQUIRED
REV	REVISION/REVISED
RM	ROOM
RO	ROUGH OPENING
RTD	RATED
RTG	RATING
S	
S	SOUTH
SA	SUPPLY AIR
SAF	SELF ADHERED FLASHING
SC	SOLID CORE
SCHED	SCHEDULE
SD	STORM DRAIN
SECT	SECTION
SF	SQUARE FEET/FOOT
SH	SPRINKLER HEAD
SHR	SHOWER
SHT	SHEET
SIM	SIMILAR
SM	SHEET METAL
SM	SURFACE MOUNTED
SP	STANDPIPE
SPEC	SPECIFICATION
SPK	SPRINKLER OR SPEAKER
SPKR	SPEAKER
SQ	SQUARE
SS	STAINLESS STEEL
SSK	SERVICE SINK
STA	STATION
STC	SOUND TRANSMISSION COEFFICIENT
STL	STEEL
STOR	STORAGE
STRG	STRINGER
STRUCT	STRUCTURAL
STRUCT	STRUCTURE OR STRUCTURAL
SUBCAT	SUBCATEGORY
SUSP	SUSPENDED
SYM	SYMMETRICAL
SYS	SYSTEM
T	
T	TREAD
T&B	TOP AND BOTTOM
T&G	TONGUE AND GROOVE
TEL	TELEPHONE/TELECOM
TELE	TELEPHONE
TEMP	TEMPERATURE
TEMP	TEMPORARY
THK	THICKNESS
THRU	THROUGH
TKBD	TACK BOARD
TLT	TOILET
TMPD	TEMPERED
TO	TOP OF
TOB	TOP OF BEAM
TOC	TOP OF CONCRETE
TOS	TOP OF STEEL
TS	TUBE STEEL
TV	TELEVISION
TYP	TYPICAL
U	
UNFIN	UNFINISHED
UNO	UNLESS NOTED OTHERWISE
URNL	URINAL
V	
VAC	VENTILATION AND AIR CONDITIONING
VAR	VARIES
VERT	VERTICAL
VIF	VERIFY IN FIELD
VP	VISION PANEL
VR	VAPOR RETARDER
W	
W	WIDE/WEST
W/	WITH
W/O	WITHOUT
WC	WATER CLOSET
WIN	WINDOW
WM	WIRE MESH
WP	WATERPROOF/ WATERPROOFING
WPM	WATERPROOF MEMBRANE
WS	WEATHER-STRIPPING
WSCT	WAINSCOT
WT	WEIGHT
WV	WATER VALVE
WWF	WELDED WIRE FABRIC
WWM	WELDED WIRE MESH

PROJECT DESCRIPTION

THE PROJECT CONSISTS OF PHASE 2 OF THE REHABILITATION OF 28-34 PARK PLACE, COMMONLY KNOWN AS CITIZEN'S BLOCK, LOCATED IN THE DOWNTOWN ROCKVILLE SECTION OF VERNON, CT. PHASE 1 WORK INCLUDED ABATEMENT, INTERIOR DEMOLITION, AND BASEMENT SLAB REPLACEMENT. PHASE 3 WILL CONSIST OF THE INTERIOR FIT-OUT OF OFFICE SPACES.

THE CURRENT PROJECT, PHASE 2, IS THE CONSTRUCTION OF AN EXTERIOR ADDITION ON THE REAR OF THE BUILDING WHICH WILL HOUSE AN ENTRANCE, LOBBY, STAIR AND ELEVATOR. THE TYPE OF CONSTRUCTION OF THE NEW ADDITION MATCHES THE CURRENT BUILDING WHICH IS TYPE IIIB. THE EXTERIOR WALL ASSEMBLY CONSISTS OF BRICK VENEER OVER CONTINUOUS INSULATION ON A CONCRETE MASONRY UNIT STRUCTURAL BACK-UP WALL. INTERIOR WALL FINISHES WILL BE INSTALLED IN PHASE 3. FLOOR AND ROOF ASSEMBLIES ARE PLYWOOD SHEATHING ON WOOD JOISTS. NEW ROOF INSULATION AND COVERING WILL BE INSTALLED ON THE NEW ADDITION. FLOOR AND CEILING FINISHES WILL BE INSTALLED IN PHASE 3. THIS PHASE ALSO CONSISTS OF ANY REQUIRED STRUCTURAL WORK TO REPAIR OR CREATE OPENINGS IN EXTERIOR AND INTERIOR BEARING WALLS. THE EXISTING CENTRALLY LOCATED WOOD FRAMED BEARING WALL STAIR SHAFT WILL BE DEMOLISHED AND REPLACED WITH A NEW CONCRETE MASONRY UNIT STAIR ENCLOSURE. NEW STAIRS IN THE TWO ENCLOSURES WILL ALSO BE CONSTRUCTED IN THIS PHASE. THE ELEVATOR HOISTWAY WILL BE CONSTRUCTED FOR THE ELEVATOR INSTALLATION IN A FUTURE PHASE. ALL INTERIOR FIT-OUT, FINISHES, AND MECHANICAL/ ELECTRICAL/ PLUMBING WILL BE INSTALLED IN FUTURE PHASES.

GENERAL NOTES

1. G.C. TO PROVIDE ALL DEMOLITION AND DUMPSTERS AS IS NECESSARY TO COMPLETE THE WORK.
2. ALL MATERIALS ARE TO BE NEW UNLESS NOTED OTHERWISE.
3. IF PLANS AND SPECIFICATIONS PROVIDE CONFLICTING INFORMATION, THEN THE STRICTEST, MOST EXPENSIVE INTERPRETATION SHALL APPLY.
4. ALL INTERIOR DIMENSIONS SHOWN FOR EXISTING CONSTRUCTION IS TO THE FACE OF FINISHED SURFACE. INTERIOR DIMENSIONS FOR NEW WORK SHOWN ARE GIVEN FROM FACE OF STUD FOR STUD WALLS, FACE OF MASONRY FOR MASONRY WALLS, OR CENTERLINE OF BEAMS/ COLUMNS (UNO). ALL DIMENSIONS TO BE FIELD VERIFIED. G.C. TO NOTIFY THE ARCHITECT WITH DISCREPANCIES, IF ANY.
5. CONTRACTOR SHALL FAMILIARIZE HIMSELF WITH THE PROJECT THROUGH THE INSPECTION OF THE SITE, DRAWINGS AND SPECIFICATIONS. THE EXISTING CONSTRUCTION SHOWN ON DRAWINGS REPRESENTS THE OBSERVABLE CONDITIONS BY THE ARCHITECT AT THE TIME OF THE FIELD SURVEY. CONTRACTOR SHALL VERIFY IN FIELD ALL DIMENSIONS AND EXISTING CONDITIONS PRIOR TO COMMENCEMENT OF WORK. NOTIFY ARCHITECT OF ANY DISCREPANCIES BETWEEN EXISTING CONDITIONS AND NEW WORK. ANY WORK PERFORMED PRIOR TO PROPER FIELD VERIFICATION AND FOUND TO BE NONCONFORMING TO THE CONTRACT DOCUMENTS IS SUBJECT TO CORRECTION AT NO COST TO THE OWNER.
6. ALL LUMBER IN CONTACT WITH CONCRETE OR MASONRY SHALL BE PRESSURE TREATED.
7. REPAIR/ INFILL ALL ABANDONED PENETRATIONS, OR MISSING CONSTRUCTION IN WALL/ CEILING ASSEMBLIES THAT ARE EXPOSED TO VIEW OR ACT AS PLENUM SPACES. REPAIR/ INFILL CONSTRUCTION TO MATCH ADJACENT EXISTING CONSTRUCTION.
8. FLOOR CONSTRUCTION SHALL REMAIN CONTINUOUS ACROSS ALL MECHANICAL CHASES THROUGHOUT THE ENTIRE BUILDING. ALL FLOOR PENETRATIONS SHALL BE FIRESTOPPED AS REQUIRED. THIS SHALL NOT APPLY AT SHAFTS.
9. PROVIDE FIRESTOPPING AT ALL DUCT PIPE AND OTHER PENETRATIONS THROUGH RATED FIREWALLS AND PARTITIONS. USE UL RATED SEALANTS AND CAULKING AS MANUFACTURED BY HILTI, DOW, 3M OR APPROVED EQUAL. FOLLOW MANUFACTURER'S INSTALLATION INSTRUCTIONS. REFER TO MECHANICAL DRAWINGS FOR LOCATION OF ANY FIRE DAMPERS.
10. ALL ELECTICAL, PLUMBING AND HEATING PIPING TO BE CONCEALED IN WALLS AND FLOORS, UNLESS NOTED OTHERWISE.
11. PROVIDE METAL UL FIRE RATED PLUMBING ACCESS PANELS AS INDICATED ON THE PLANS. PANELS ARE TO BE 18"X 18" WITH KEYED LOCKS. PROVIDE PANELS TO ACCESS BATHROOM PLUMBING TRAPS. FIELD VERIFY LOCATIONS. PROVIDE SUBMITTAL ARCHITECT'S REVIEW.
12. PROVIDE ALL NECESSARY CHASES AND "BOX OUTS" FOR PLUMBING AND HEATING PIPING AS REQUIRED TO COMPLETE THE WORK. REVIEW LOCATIONS WITH ARCHITECT PRIOR TO INSTALLATION.
13. ANY GLAZING WITHIN 18" OF FINISH FLOORING SHALL BE TEMPERED GLASS
14. ALL WIRING SHALL BE RUN CONCEALED. NOTIFY ARCHITECT OF PROBLEM AREAS FOR DIRECTION PRIOR TO BEGINNING WORK. WIRE MOLD IS NOT ACCEPTABLE.
15. ALL FINISH FLOORING SHALL BE NEW UNLESS NOTED OTHERWISE. REMOVE EXISTING FLOORING AND PREPARE SURFACES AS REQUIRED TO RECEIVE NEW FLOORING.
16. DRAWINGS MAY NOT DETAIL EVERY EXISTING CONDITION OR INTERSECTION OF EXISTING TO NEW WORK. WHERE A DETAIL IS DEVELOPED AND REFERENCED FOR A SPECIFIC CONDITION, SAME OR SIMILAR DETAIL SHALL APPLY TO IDENTICAL OR SIMILAR CONDITIONS ELSEWHERE IN THE PROJECT.
17. REFASTEN LOOSE FLOOR BOARDS AND TAKE OUT HIGH SPOTS. REMOVE SQUEAKS.
18. CONTRACTOR SHALL PROVIDE ALL NECESSARY DEMOLITION OF EXISTING COMPONENTS AS REQUIRED TO COMPLETE THE SCOPE OF WORK AS INDICATED ON THESE DRAWINGS.
19. WHEN REMOVING EXISTING COMPONENTS, CARE MUST BE TAKEN TO ENSURE THAT ADJACENT SURFACES TO REMAIN ARE NOT DAMAGED. PATCH ANY DAMAGE WHICH MIGHT OCCUR. PREPARE FOR NEW FINISHES OR LAYOUT.
20. WHEN A WALL IS INDICATED TO BE REMOVED, ALL EXISTING COMPONENTS OR SERVICES IN OR ON THE WALL SHALL BE REMOVED AND/OR RELOCATED (LIGHTS, PLUMBING, ETC.)
21. CONTRACTOR SHALL PATCH AND REPAIR ANY DAMAGES TO EXISTING COMPONENTS WHICH ARE TO REMAIN.
22. IF REQUESTED, RETURN ALL REUSABLE ITEMS TO OWNER.
23. REFER TO STRUCTURAL, MECHANICAL, PLUMBING AND ELECTRICAL DRAWINGS FOR ADDITIONAL INFORMATION.

SHEET LIST

GENERAL SHEETS	
G-000	COVER SHEET
G-001	DRAWING LIST & GENERAL INFORMATION
G-100	CODE SUMMARY
CIVIL DRAWINGS	
V-100	SITE SURVEY
C-100	SITE PLAN
C-101	GRADING AND DRAINAGE PLAN
C-200	NOTES AND DETAILS
STRUCTURAL DRAWINGS	
S-P2-1.0	FOUNDATION PLAN
S-P2-1.1	FIRST FLOOR FRAMING PLAN
S-P2-1.2	SECOND FLOOR FRAMING PLAN
S-P2-1.3	THIRD FLOOR FRAMING PLAN
S-P2-1.4	ROOF FRAMING PLAN
S-P2-2.0	TYPICAL SECTIONS AND DETAILS
S-P2-2.1	FOUNDATION SECTIONS AND DETAILS
S-P2-3.1	FRAMING SECTIONS AND DETAILS
S-P2-3.2	FRAMING SECTIONS AND DETAILS
S-P2-3.3	FRAMING SECTIONS AND DETAILS
ARCHITECTURAL DRAWINGS	
AD-100	DEMOLITION FLOOR PLANS
A-100	BASEMENT FLOOR PLAN
A-110	FIRST FLOOR PLAN
A-120	SECOND FLOOR PLAN
A-130	THIRD FLOOR PLAN
A-140	ROOF PLAN
A-210	EXTERIOR ELEVATIONS
A-211	EXTERIOR ELEVATIONS
A-320	WALL SECTIONS
A-420	ENLARGED STAIR PLANS AND SECTIONS
A-421	STAIR DETAILS
A-430	ENLARGED ELEVATOR PLANS AND SECTIONS
A-510	CONSTRUCTION ASSEMBLIES AND DETAILS
A-520	ROOF DETAILS
A-521	ROOF DETAILS
A-610	DOOR AND WINDOW SCHEDULES AND ELEVATIONS
A-611	DOOR DETAILS
A-612	WINDOW DETAILS

THE ARCHITECTS
THE INTEGRITY, THE ABILITY, THE EXPERIENCE
THE ARCHITECTS
Robert B. Hunt, AIA
54 Arbor Street
Hartford, CT 06106
Tel: 860-232-2707

Crosskey Architects LLC
Architecture Preservation Interiors
750 Main Street, Hartford, CT 06103
T: (860)724-3000 F: (860)724-3013

CITIZEN'S BLOCK

28-34 PARK PLACE, VERNON CT

Owner: Town of Vernon - Administration

14 Park Place, Vernon CT 06066

NOT FOR CONSTRUCTION RELEASED FOR: BID

Drawn: PS
Issued: 03.17.2021
Status:

Revisions

NO	DATE	DESCRIPTION

G-001
GENERAL INFORMATION

Copyright © 2020

DEVICE & ACCESSORIES MOUNTING HEIGHTS

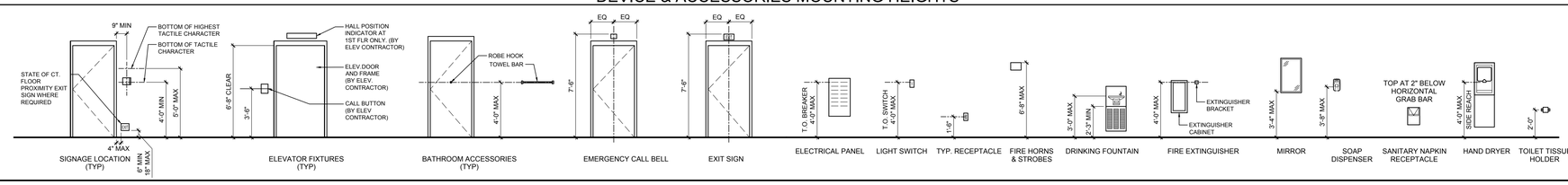

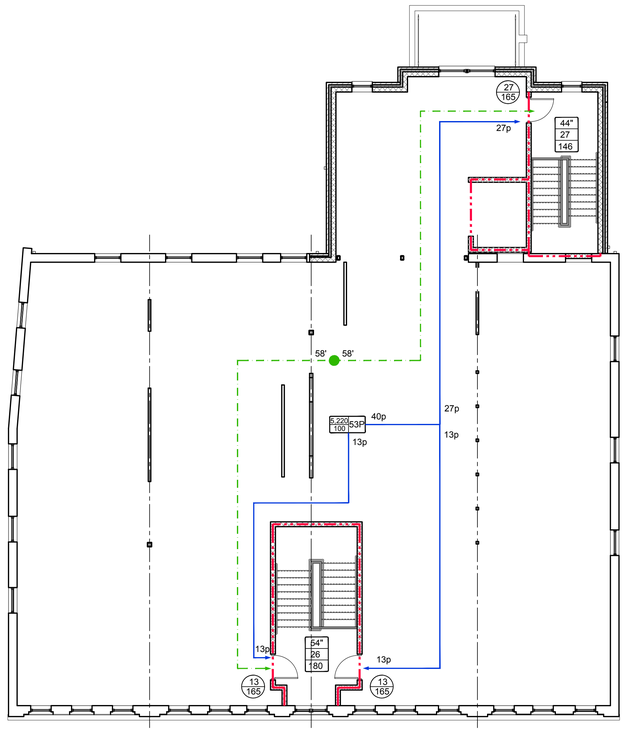

3 THIRD FLOOR PLAN
SCALE: 1/8"=1'-0"

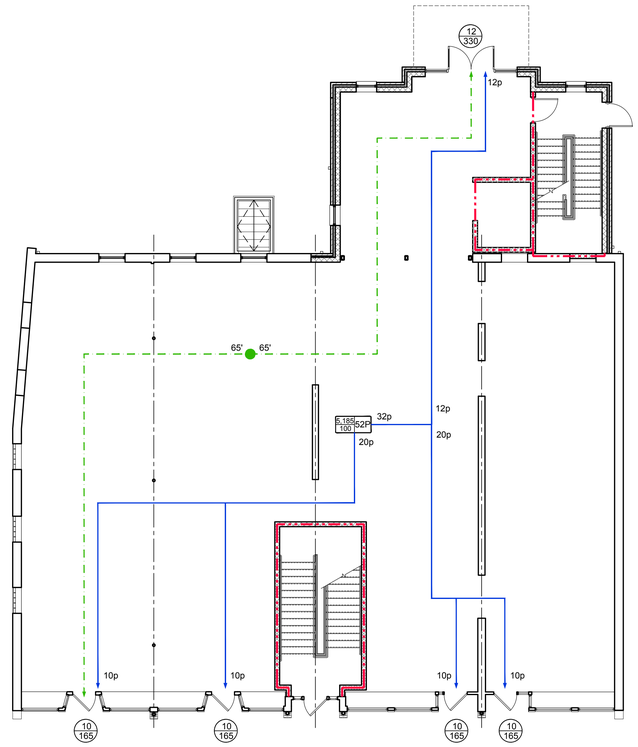

1 FIRST FLOOR PLAN
SCALE: 1/8"=1'-0"

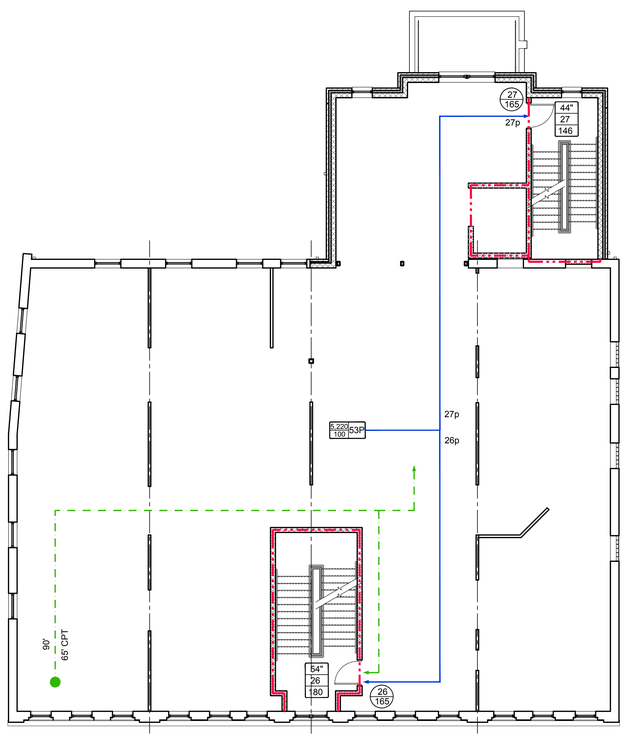

2 SECOND FLOOR PLAN
SCALE: 1/8"=1'-0"

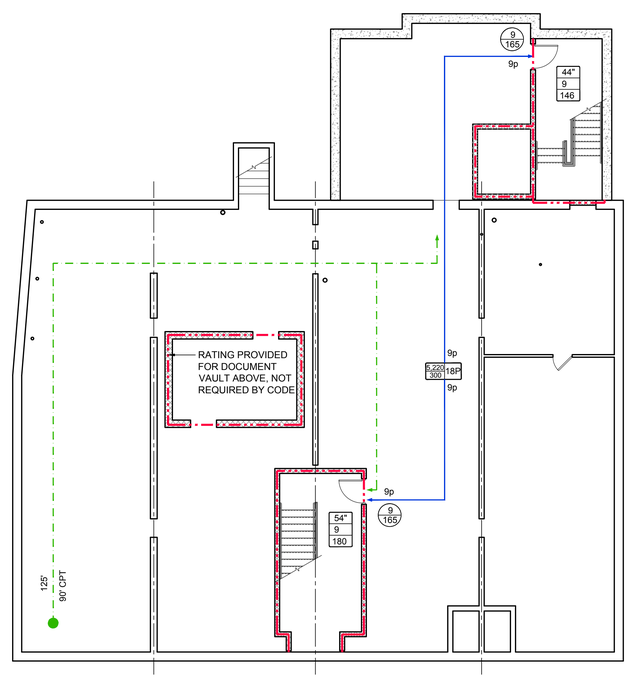

0 BASEMENT FLOOR PLAN
SCALE: 1/8"=1'-0"

BUILDING CODE SUMMARY

CODE DIAGRAMS LEGEND

FIRE RATED SEPARATION DESIGNATIONS

1 HOUR FIRE SEPARATION

2 HOUR FIRE SEPARATION

NOTE:
OTHER PARTITIONS MAY CONTAIN RATINGS FOR OTHER REQ'TS WHICH ARE NOT SHOWN HERE, SEE PARTITION TAGS ON ARCHITECTURAL SHEETS FOR FURTHER INFO.

ROOM OCCUPANCY LOAD

900 / 20 / 45P — ROOM AREA IN SQUARE FEET / OCCUPANT LOAD / OCCUPANCY LOAD FACTOR

18p — NUMBER OF OCCUPANTS EXITING DIRECTION OF TRAVEL

85' — MAX. TRAVEL DIST. PATH OF MAX. TRAVEL DISTANCE

EXIT CAPACITY

75 / 168 — ACTUAL EGRESS CAPACITY OF DOOR / MAX. ALLOWABLE EGRESS CAPACITY OF DOOR

44" / 62 / 146 — WIDTH OF STAIR / ACTUAL EGRESS CAPACITY OF STAIR / MAX. ALLOWABLE EGRESS CAPACITY OF STAIR

DOOR CAPACITY CALCULATIONS:
SECTION 1005.3.2
ACTUAL UNOBSTRUCTED OPENING ÷ 0.2 = CAPACITY
33" ÷ 0.2 = 165 OCCUPANTS
66" ÷ 0.2 = 330 OCCUPANTS

STAIR CAPACITY CALCULATIONS:
SECTION 1005.3.1
ACTUAL UNOBSTRUCTED OPENING ÷ 0.3 = CAPACITY
44" ÷ 0.3 = 146 OCCUPANTS
54" ÷ 0.3 = 180 OCCUPANTS

2018 CONNECTICUT STATE BUILDING CODE

- 2015 INTERNATIONAL BUILDING CODE with AMENDMENTS
- 2015 INTERNATIONAL EXISTING BUILDING CODE with AMENDMENTS
- 2015 INTERNATIONAL PLUMBING CODE with AMENDMENTS
- 2015 INTERNATIONAL MECHANICAL CODE with AMENDMENTS
- 2015 INTERNATIONAL ENERGY CONSERVATION CODE with AMENDMENTS
- 2017 NFPA 70, NATIONAL ELECTRIC CODE with AMENDMENTS
- ICC A117.1-2009 with AMENDMENTS

CHAPTER 3 - USE GROUP AND OCCUPANCY CLASSIFICATION

- REFER TO DIAGRAMS FOR USE LOCATIONS

EXISTING USE: B, R2

PROPOSED USE: SINGLE OCCUPANCY MULTISTORY BUILDING: B, BUSINESS USE

CHAPTER 6 - TYPES OF CONSTRUCTION

CONSTRUCTION CLASSIFICATION: IIIB (EXISTING BUILDING AND ADDITION)

CHAPTER 5 - BUILDING HEIGHTS AND AREAS

- REFER TO DIAGRAMS FOR ILLUSTRATION

TABLE 504.3 & 504.4

BUILDING HEIGHT/ STORIES	ALLOWABLE	ACTUAL	
B USE GROUP (NONSPRINKLERED)	55' / 3	44' / 3	OK

IBC TABLE 506.2
IBC SECTION 506.2.3
BUILDING AREA CALCULATIONS

ALLOWABLE AREA FACTOR:
B USE GROUP (NONSPRINKLERED) — TYPE IIIB — 19,000 SF

EQUATION 5-2: $A_a = [A_t + (NS \times I_f)] \times S_a$
$A_a = [19{,}000 + (19{,}000 \times 0)] \times 3$
$A_a = 57{,}000$ SF

BUILDING AREA:	EXISTING	ADDITION	TOTAL	
FIRST FLOOR	4,420 SF	765 SF	5,185 SF	OK
SECOND FLOOR	4,455 SF	765 SF	5,220 SF	OK
THIRD FLOOR	4,455 SF	765 SF	5,220 SF	OK
TOTAL	13,330 SF	2,295 SF	**15,625 SF**	**OK**

FIRE RESISTANCE RATINGS

BUILDING ELEMENTS (T601, TYPE IIIB)	REQUIRED	PROVIDED
PRIMARY STRUCTURAL FRAME	0 HR	0 HR
BEARING WALLS - EXTERIOR	2 HR	2 HR
BEARING WALLS - INTERIOR	0 HR	0 HR & 2 HR
FLOOR CONSTRUCTION	0 HR	0 HR
ROOF CONSTRUCTION	0 HR	0 HR

EXTERIOR WALL FIRE SEPARATION DISTANCE (T602, TYPE IIIB)		
X < 5	1 HR	2 HR
10 ≤ X < 30	1 HR	2 HR
X ≥ 30	0 HR	2 HR

FIRE SEPARATION ASSEMBLIES		
SHAFT ENCLOSURES (713.4)	1 HR (<4 STORIES)	1 HR
STAIR ENCLOSURES (1023.20)	2 HR (≥4 STORIES)	2 HR
SHAFT ENCLOSURES (713.4)	2 HR (≥4 STORIES)	2 HR

CHAPTER 8 - INTERIOR FINISHES (PHASE III)

TABLE 803.11

USE GROUP	EXIT STAIRS	EXIT ACCESS	ROOMS
B USE GROUP	A	B	C

CHAPTER 9 - FIRE PROTECTION SYSTEMS

SPRINKLER SYSTEM: NOT REQUIRED / NOT PROVIDED

STANDPIPE: NOT REQUIRED / NOT PROVIDED

PORTABLE FIRE EXTINGUISHERS: PROVIDED PER SECTION 906.3 & NFPA 10 (PHASE III SCOPE)

FIRE ALARMS: PROVIDED AS REQUIRED (PHASE III SCOPE OF WORK)

SMOKE ALARMS: PROVIDED AS REQUIRED (PHASE III SCOPE OF WORK)

DRAFT STOPPING (SECTION 718)
AT FLOORS — PROVIDED AS REQUIRED (PHASE III SCOPE OF WORK)
AT ATTICS — PROVIDED AS REQUIRED (PHASE III SCOPE OF WORK)

CHAPTER 10 - MEANS OF EGRESS

MEANS OF EGRESS PER FLOOR: REFER TO CODE DIAGRAMS

TABLE 1004.1.2

OCCUPANT LOAD	AREA SF	SF / OCC	OCCUPANCY
BASEMENT			
B USE GROUP	5,220 SF	300	18
FIRST FLOOR			
B USE GROUP	5,185 SF	100	52
SECOND FLOOR			
B USE GROUP	5,220 SF	100	53
THIRD FLOOR			
B USE GROUP	5,220 SF	100	53
- TOTAL BUILDING OCCUPANT LOAD:			**176 OCC**

TABLES 1017.2 & 1006.2.1

EXIT ACCESS DISTANCE	ALLOWABLE	ACTUAL	
B USE GROUP	200 / 100' CPT	125' / 90' CPT	(BASEMENT)
	200 / 75' CPT	65' / 0' CPT	(FIRST FLOOR)
	200 / 75' CPT	90' / 65' CPT	(SECOND FLOOR)
	200 / 75' CPT	58' / 0' CPT	(THIRD FLOOR)

SECTION 1011.2

MIN. STAIR WIDTH	ALLOWABLE	ACTUAL
OCC. LOAD < 50	36"	44"
OCC. LOAD > 50	44"	N/A
ACCESSIBLE STAIR	48" CLEAR	48" CLEAR, W/ AREA OF REFUGE

TABLE 1020.2

MIN. CORRIDOR WIDTH	ALLOWABLE	ACTUAL
OCC. LOAD < 50	36"	N/A
OCC. LOAD > 50	44"	N/A

SECTION 1020.4

DEAD END CORRIDORS	ALLOWABLE	ACTUAL
B USE GROUP	50'	N/A

CHAPTER 11 - ACCESSIBILITY

- ICC A117.1-2009

HANDICAPPED ACCESSIBILITY: PROVIDED THROUGHOUT (PHASE III SCOPE OF WORK)

CHAPTER 29 - PLUMBING SYSTEMS

TABLE 2902.1 (IPC TABLE 403.1)
MIN. PLUMBING FACILITIES : PROVIDED IN PHASE III

CHAPTER 13 - ENERGY EFFICIENCY (NEW ADDITION)

2015 IECC TABLE C402.1.3

THERMAL ENVELOPE INSULATION	REQUIRED	PROVIDED
ABOVE ROOF DECK	R-30ci	MIN. R-30ci
MASS WALL ABOVE GRADE	R-11.4ci	MIN. R-13ci
MASS WALLS BELOW GRADE	R-7.5ci	MIN. R-10ci
UNHEATED SLABS	R-10ci	MIN. R-10ci

THE ARCHITECTS
THE INTEGRITY, THE ABILITY, THE EXPERIENCE
THE ARCHITECTS
Robert B. Hurd, AIA
56 Arbor Street
Hartford, CT 06106
Tel: 860-232-2707

Crosskey Architects LLC
Architecture Preservation Interiors
750 Main Street, Hartford, CT 06103
T: (860)724-3000 F: (860)724-3013

CITIZEN'S BLOCK

28-34 PARK PLACE, VERNON CT

Owner: Town of Vernon - Administration

14 Park Place, Vernon CT 06066

NOT FOR CONSTRUCTION RELEASED FOR: BID

Drawn: PS
Issued: 03.17.2021
Status:

Revisions

NO	DATE	DESCRIPTION

G-100
CODE SUMMARY

Copyright © 2020

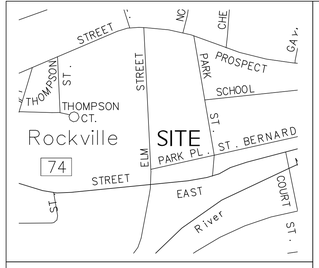

LOCATION PLAN
1"=1000'

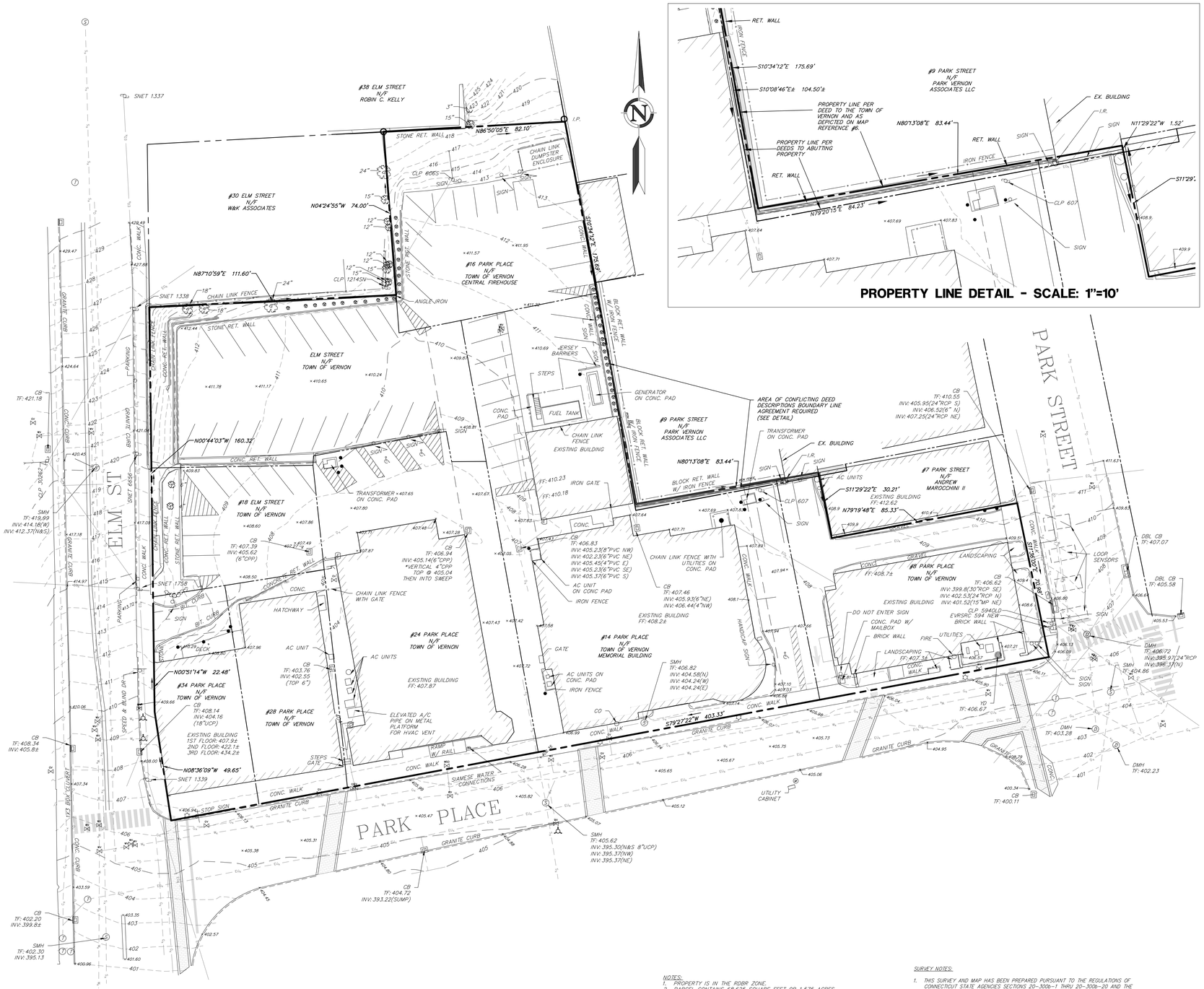

PROPERTY LINE DETAIL - SCALE: 1"=10'

LEGEND

EXISTING	DESCRIPTION
COMMUNICATION	
	OVERHEAD COMM. LINES (CABLE, TEL, ETC.)
	UNDERGROUND COMMUNICATION LINES
CONTROL POINTS	
	BENCHMARK
DOMESTIC WATER	
	WATER MAIN
	WATER SERVICE
	WATER VALVE
	FIRE HYDRANT
LIGHTING	
	POLE MOUNTED LIGHT
NATURAL GAS	
	GAS MAIN
	GAS SERVICE LINE
POWER	
	ELECTRICAL LINES, OVERHEAD
	ELECTRICAL LINES, UNDERGROUND
	UTILITY POLE
PROPERTY	
	PROPERTY LINE
	EASEMENT LINE
	IRON PIPE
	IRON ROD
	MONUMENT
ROADS	
	GUARD RAIL
	SIGN
SITE FEATURES	
	EDGE OF WATER
	BARBED WIRE FENCE
	CHAIN LINK FENCE
	WIRE FENCE
	STONE WALL
	TREE
	TREE LINE
SANITARY SEWER	
	SANITARY SEWER MAIN
	SANITARY SEWER SERVICE LINE
	SANITARY SEWER MANHOLE
STORM SEWER	
	STORM DRAIN PIPE
	STORM DRAIN MANHOLE
	CURB INLET
	CATCH BASIN
TOPOGRAPHY	
	CONTOUR
×61.95	SPOT ELEVATION
WETLANDS	
	WETLANDS LINE

SCALE: 1" = 20' 0 10' 20' 40'

MAP REFERENCES:

1. BOUNDARY SURVEY PREPARED FOR PROPOSED ROCKVILLE COURTHOUSE VERNON, CONNECTICUT BY: LENARD ENGINEERING, INC. SCALE: 1"=30' DATED: 8-20-92 REV. 4-2-93
2. LAND OF THE TOWN OF VERNON VERNON, CONNECTICUT TO BE CONVEYED TO THE FIRST FEDERAL SAVINGS & LOAN ASSOC. OF EAST HARTFORD BY: EVERETT O. GARDNER SCALE: 1"=20' DATED 8-15-69
3. PARK PLACE PROPERTY OF GEORGE SANDALS NO. 30-32 PARK PLACE ROCKVILLE - VERNON, CONN. BY: HAYDEN L. GRISWOLD SCALE: 1"=10' DATED JUNE 14, 1957
4. PLAN OF LANDS AT ELM ST. & PARK PLACE ROCKVILLE, CONN. BY: C.H. BANCROFT SCALE: 1"=20' DATED: 4-17-1926 MAP NO. 4-426
5. PLAN OF LAND OF J.R. QUINN & M.E. SOCIETY ROCKVILLE, CONN. BY: C.H. BANCROFT SCALE: 1"=10' DATED: MARCH 1923 MAP NO. 2-323
6. PLAN OF LANDS NEAR PARK PLACE ROCKVILLE, CONN. BY: C.H. BANCROFT SCALE: 1"=20' MAP NO. 3-323

NOTES:

1. PROPERTY IS IN THE ROBR ZONE.
2. PARCEL CONTAINS 68,625 SQUARE FEET OR 1.575 ACRES.
3. HORIZONTAL DATUM IS BASED ON NAD83. VERTICAL DATUM IS BASED ON NAVD88.
4. PROPERTY DOES NOT FALL WITHIN THE LIMITS OF A FLOOD HAZARD ZONE AS DEPICTED ON: "FIRM FLOOD INSURANCE RATE MAP NUMBER 0901310005C. TOWN OF VERNON CONNECTICUT HARTFORD COUNTY EFFECTIVE DATE: 8/9/1999 FEDERAL EMERGENCY MANAGEMENT AGENCY FEDERAL INSURANCE ADMINISTRATION.
5. UNDERGROUND UTILITY, STRUCTURE AND FACILITY LOCATIONS DEPICTED AND NOTED HEREON HAVE BEEN COMPILED, IN PART, FROM RECORD MAPPING SUPPLIED BY THE RESPECTIVE UTILITY COMPANIES OR GOVERNMENTAL AGENCIES, FROM FIELD TESTIMONY AND FROM OTHER SOURCES. THESE LOCATIONS MUST BE CONSIDERED AS APPROXIMATE IN NATURE. ADDITIONALLY, OTHER SUCH FEATURES MAY EXIST ON THE SITE, THE EXISTENCE OF WHICH ARE UNKNOWN TO DESIGN PROFESSIONALS, INC. THE SIZE, LOCATION AND EXISTENCE OF ALL SUCH FEATURES MUST BE FIELD DETERMINED AND VERIFIED BY THE APPROPRIATE AUTHORITIES PRIOR TO CONSTRUCTION.
6. CONTRACTOR SHALL CONTACT "CALL BEFORE YOU DIG" FOR UNDERGROUND UTILITY MARKING AT LEAST TWO FULL WORKING DAYS PRIOR TO START OF CONSTRUCTION: 1-800-922-4455 OR WWW.CBYD.COM.

SURVEY NOTES:

1. THIS SURVEY AND MAP HAS BEEN PREPARED PURSUANT TO THE REGULATIONS OF CONNECTICUT STATE AGENCIES SECTIONS 20-300b-1 THRU 20-300b-20 AND THE "STANDARDS FOR SURVEYS AND MAPS IN THE STATE OF CONNECTICUT" AS ADOPTED BY THE CONNECTICUT ASSOCIATION OF LAND SURVEYORS, INC. ON SEPTEMBER 26, 1996.
   - TYPE OF SURVEY IS A PROPERTY & TOPOGRAPHIC SURVEY AND IS INTENDED TO DEPICT THE LOCATION OF EXISTING CONDITIONS RELATIVE TO PROPERTY LINES.
   - THIS IS A DEPENDENT RESURVEY BASED ON THE REFERENCED MAPS.
   - HORIZONTAL ACCURACY MEETS CLASS A-2 STANDARDS. VERTICAL ACCURACY MEETS CLASS V-2 STANDARDS. TOPOGRAPHICAL ACCURACY MEETS T-2 STANDARDS.

TO MY KNOWLEDGE AND BELIEF, THIS MAP IS SUBSTANTIALLY CORRECT AS NOTED HEREON.

12327
LAWRENCE R. GEISSLER, JR., L.S. — LIC. NO.

design professionals
CIVIL & TRAFFIC ENGINEERS / LAND SURVEYORS
PLANNERS / LANDSCAPE ARCHITECTS
21 JEFFREY DRIVE
P.O. BOX 1167
SOUTH WINDSOR, CT 06074
860-291-8755 - T
860-291-8757 - F
www.designprofessionalsinc.com

THE ARCHITECTS
THE INTEGRITY. THE ABILITY. THE EXPERIENCE.
THE ARCHITECTS
Robert B. Hunt, AIA
56 Arbor Street
Hartford, CT 06106
Tel: 860-232-2707

Crosskey Architects LLC
Architecture Preservation Interiors
750 Main Street, Hartford, CT 06103
T: (860)724-3000 F: (860)724-3013

CITIZEN'S BLOCK
28-34 PARK PLACE, VERNON CT
Owner: Town of Vernon - Administration

NOT FOR CONSTRUCTION

Drawn: GM
Issued: 03-17-21
Status:

Revisions

NO	DATE	DESCRIPTION

V-100

PROPERTY & TOPOGRAPHIC SURVEY

Copyright © 2020

File: C:\jobs\40035\Survey\40035 Survey Base with 30x42 title block.dwg Layout: Prop & Topo 30x42 Sheet Plotted: 3/16/2021 2:53 PM Last Saved: 3/10/2021 2:17 PM Last Saved By: gkemsarin

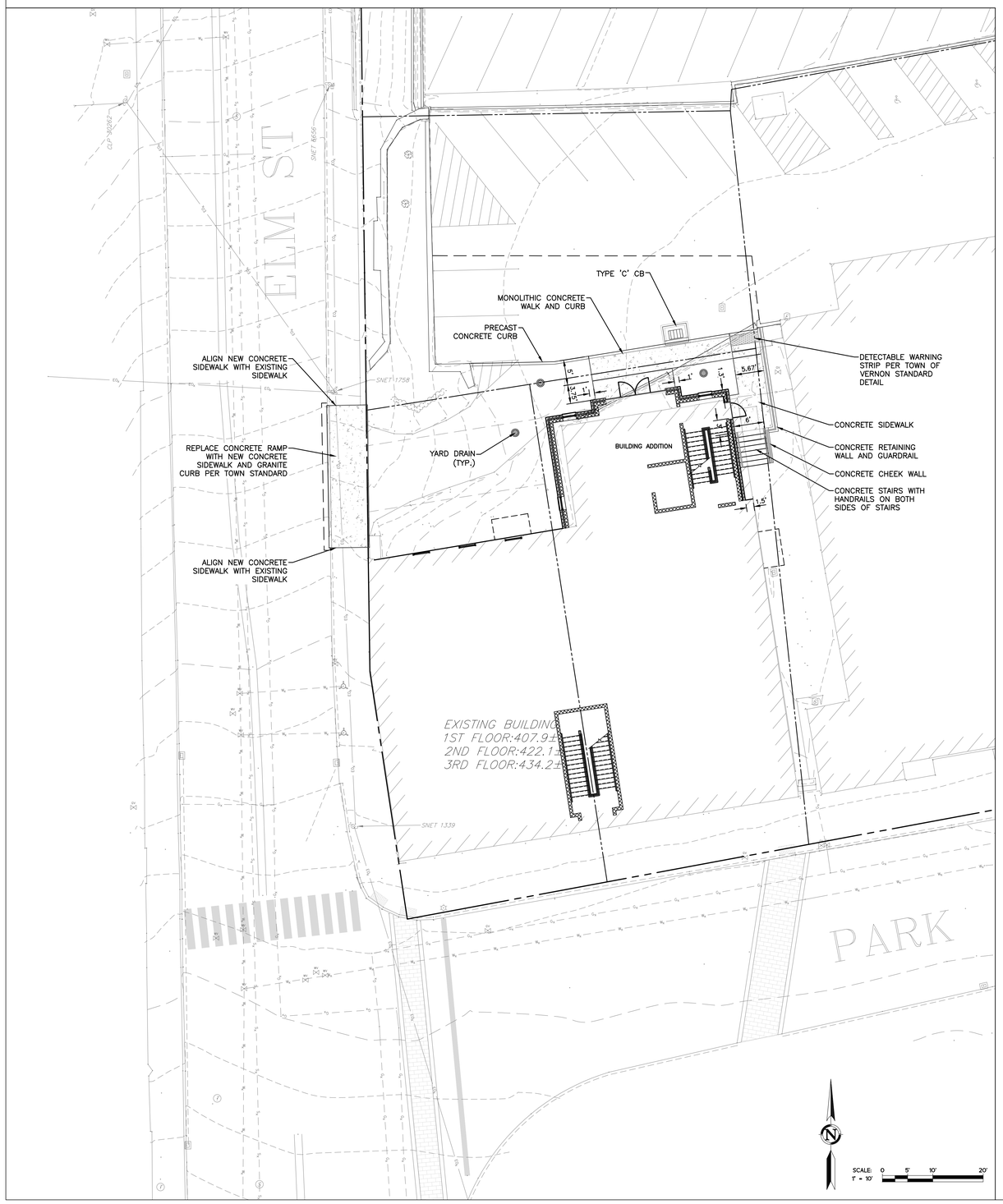

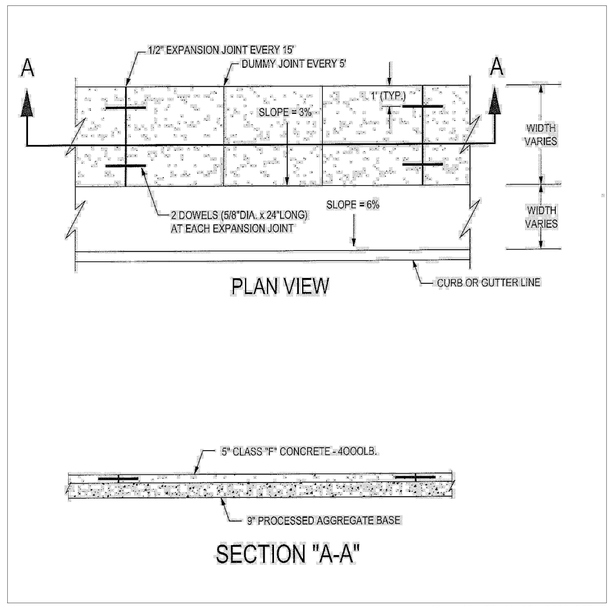

CONCRETE SIDEWALK

N.T.S.

TOWN OF VERNON STANDARD DETAIL

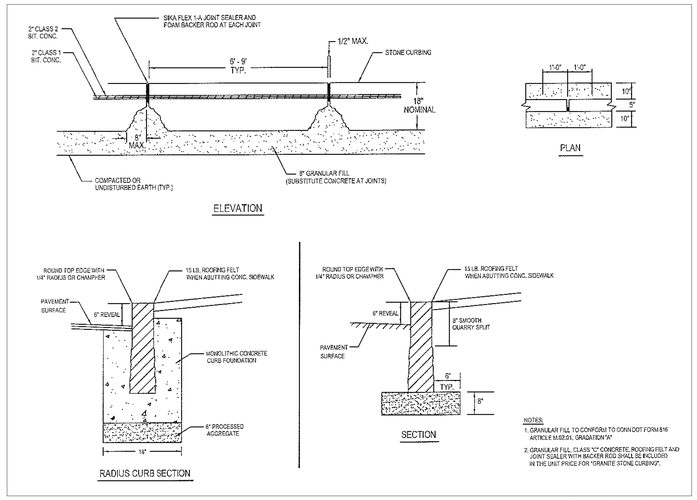

GRANITE CURB

N.T.S.

TOWN OF VERNON STANDARD DETAIL

PROPERTY OWNER:
TOWN OF VERNON
14 PARK PLACE
VERNON, CT 06066

APPLICANT:
TOWN OF VERNON
14 PARK PLACE
VERNON, CT 06066
860-870-3599

REFERENCES:
THIS PLAN REFERS TO THE FOLLOWING:
1. PLAN ENTITLED "PROPERTY & TOPOGRAPHIC SURVEY TOWN HALL COMPLEX, PARK PLACE & ELM STREET, VERNON, CT" DATED 12-5-2018 PREPARED BY DESIGN PROFESSIONALS, INC.

design professionals
21 JEFFREY DRIVE
P.O. BOX 1167
SOUTH WINDSOR, CT 06074
860-291-8755 - T
860-291-8757 - F
www.designprofessionalsinc.com
CIVIL & TRAFFIC ENGINEERS / LAND SURVEYORS
PLANNERS / LANDSCAPE ARCHITECTS

THE ARCHITECTS
THE INTEGRITY, THE ABILITY, THE EXPERIENCE
THE ARCHITECTS
Robert B. Hurd, AIA
56 Arbor Street
Hartford, CT 06106
Tel: 860-232-2707
Crosskey Architects LLC
Architecture Preservation Interiors
750 Main Street, Hartford, CT 06103
T: (860)724-3000 F: (860)724-3013

CITIZEN'S BLOCK

28-34 PARK PLACE, VERNON CT

Owner: Town of Vernon - Administration

NOT FOR CONSTRUCTION

Drawn: GM
Issued: 03-17-21
Status:

Revisions

NO	DATE	DESCRIPTION

C-100

SITE PLAN

Copyright © 2020

File: C:\jobs\4033\Engineering\AutoCAD\4033 Site Plan rev 2.dwg Layout: C-100 Site Plan Plotted: 3/16/2021 4:42 PM Last Saved: 3/16/2021 3:01 PM Last Saved By: gkrmann

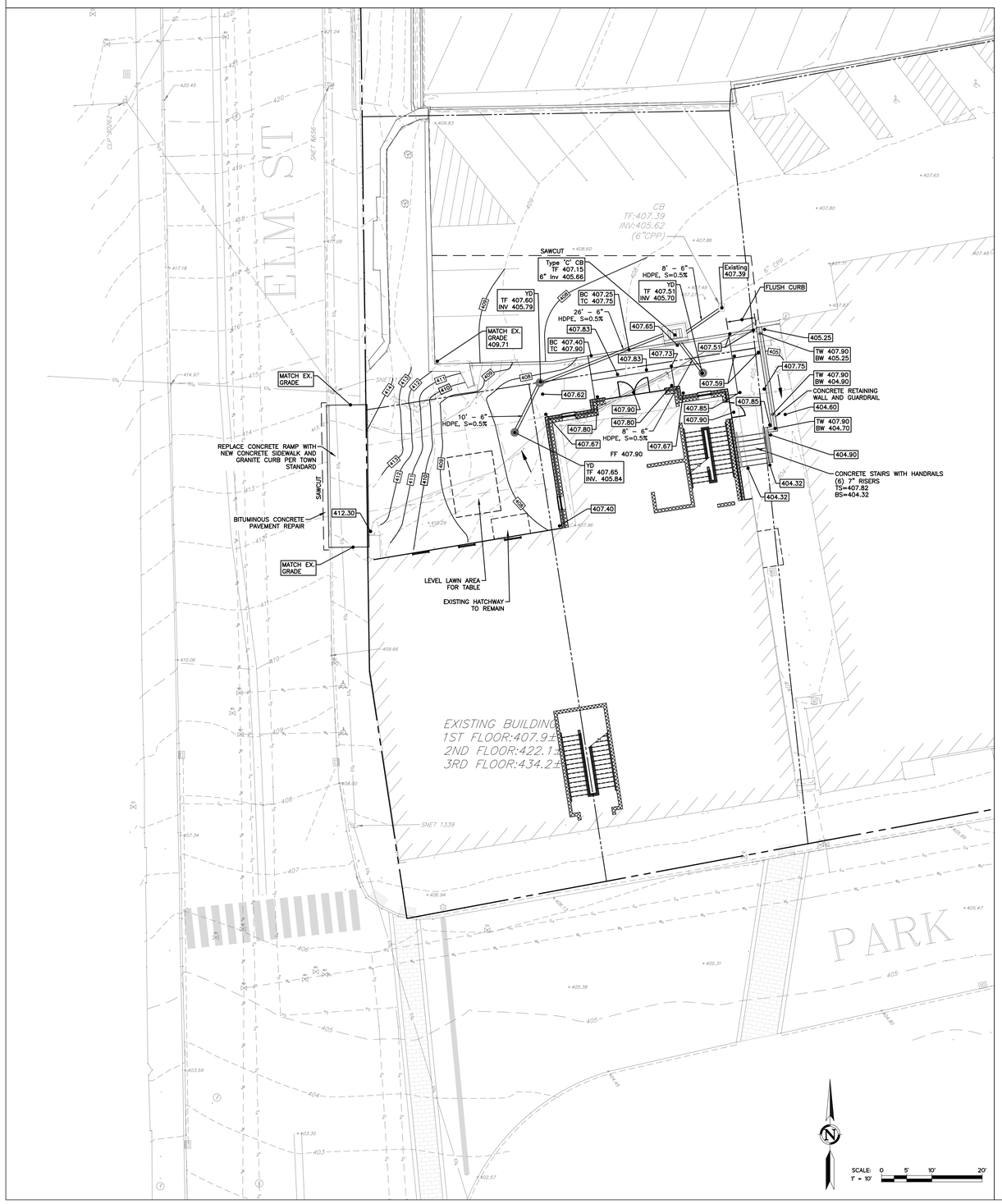

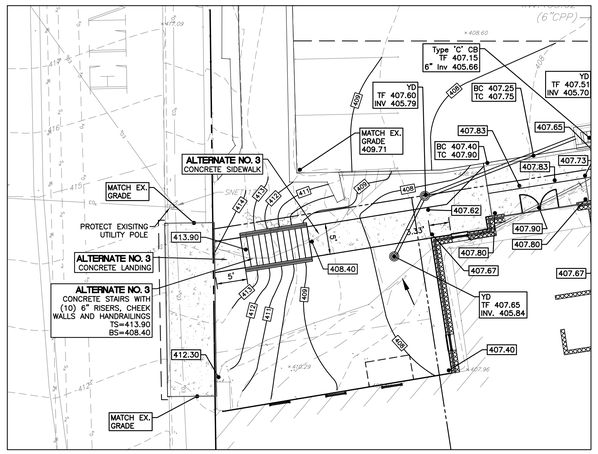

ALTERNATE NO. 3 PLAN

1"=10'

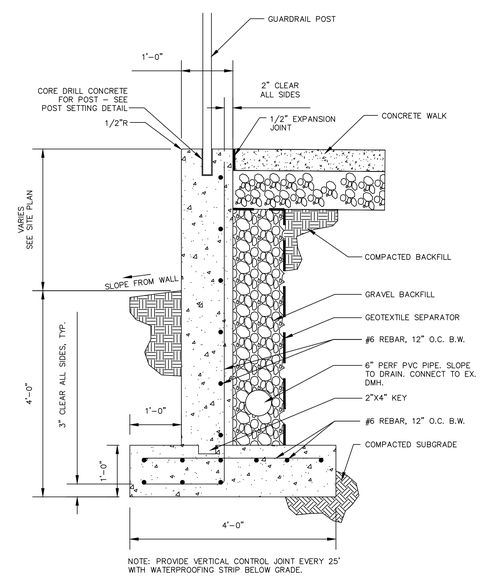

1 CONCRETE RETAINING WALL SECTION

Not to Scale

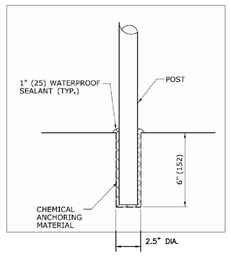

POST SETTING DETAIL

N.T.S.

PROPERTY OWNER:
TOWN OF VERNON
14 PARK PLACE
VERNON, CT 06066

APPLICANT:
TOWN OF VERNON
14 PARK PLACE
VERNON, CT 06066
860-870-3599

REFERENCES:
THIS PLAN REFERS TO THE FOLLOWING:
1. PLAN ENTITLED "PROPERTY & TOPOGRAPHIC SURVEY TOWN HALL COMPLEX, PARK PLACE & ELM STREET, VERNON, CT" DATED 12-5-2018 PREPARED BY DESIGN PROFESSIONALS, INC.

design professionals
CIVIL & TRAFFIC ENGINEERS / LAND SURVEYORS
PLANNERS / LANDSCAPE ARCHITECTS
21 JEFFREY DRIVE
P.O. BOX 1167
SOUTH WINDSOR, CT 06074
860-291-8755 – T
860-291-8757 – F
www.designprofessionalsinc.com

THE ARCHITECTS
THE INTEGRITY. THE ABILITY. THE EXPERIENCE
THE ARCHITECTS
Robert B. Hunt, AIA
56 Arbor Street
Hartford, CT 06106
Tel: 860-232-2707
Crosskey Architects LLC
Architecture Preservation Interiors
750 Main Street, Hartford, CT 06103
T: (860)724-3000 F: (860)724-3013

CITIZEN'S BLOCK

28-34 PARK PLACE, VERNON CT

Owner: Town of Vernon - Administration

NOT FOR CONSTRUCTION

Drawn: GM
Issued: 03-17-21
Status:

Revisions

NO	DATE	DESCRIPTION

C-101
GRADING AND DRAINAGE PLAN

Copyright © 2020

File: C:\jobs\4033\Engineering\AutoCAD\4033 Site Plan rev 2.dwg Layout: C-101 Grading And Drainage Plan Plotted: 3/16/2021 2:41 PM Last Saved: 3/12/2021 2:18 PM Last Saved By: gbernardin

CONSTRUCTION NOTES:

1. At least two full business days prior to starting any site activity or demolition, the contractor shall contact the applicable state utility location service by dialing 811 or submitting an online ticket request. The utilities shall be marked in all areas of proposed disturbance.

2. It is the contractor's responsibility to review all construction contract documents associated with the project scope of work, including, but not limited to, all drawings and specifications, architectural plans, boundary and topographic survey, wetlands assessment and reports, geotechnical reports, environmental reports, and approval conditions, prior to the commencement of construction. Should the contractor find conflict and/or discrepancy between the documents relative to the plans, specifications, reports, or the relative or applicable codes, regulations, laws, rules, statutes and/or ordinances, it is the contractor's sole responsibility to notify the Engineer, in writing, of said conflict and/or discrepancy prior to the start of construction.

3. The contractor shall be responsible for adhering to any conditions of approval placed on the project by the authorities having jurisdiction.

4. The contractor must comply, to the fullest extent, with the latest Occupational Health and Safety (OSHA) standards and regulations, and/or any other agency with jurisdiction for construction activities. The contractor is solely responsible for construction means, methods, techniques, sequences, or procedures, or for safety precautions and programs in connection with work on the Project. The Engineer will not be responsible for the contractor's safety, schedules, or failure to carry out its work in accordance with the contract documents. The Engineer will not have control over or charge of acts or omissions of the contractor, subcontractors, or their agents or employees, or of any persons performing portions of work on the Project.

5. Contractor must notify the Engineer in writing if there are any questions concerning the accuracy or intent of these plans or related specifications. If such notification is given, no demolition or site activity may begin until such time that the Engineer provides a written response to same.

6. Contractor shall adhere to and is responsible for compliance with all details, notes, plans and specifications contained herein. It is the responsibility of the contractor to ensure that all work performed by their subcontractors is in full compliance with these requirements.

7. The contractor shall confirm that they are in receipt of the current version of the referenced documents prior to the commencement of any work.

8. Prior to commencing work, the contractor shall review and correlate all consultants plans and specifications including the entire site plan and the latest architectural plans (including, but not limited to, structural, mechanical, electrical, plumbing, and fire suppression plans, where applicable), in particular for building utility connection locations, grease trap requirements/ details, door access, and exterior grading. Contractor must immediately notify the Architect and the Engineer, in writing, of any conflicts, discrepancies or ambiguities which exist, and receive a written resolution prior to commencing construction.

9. Prior to commencing work, contractor is required to secure all necessary and/or required permits and approvals for the construction of the project, including, but not limited to, demolition work, and all off site material sources and disposal facilities. Copies of all permits and approvals shall be maintained on site throughout the duration of the project. The contractor shall thoroughly review and understand all permits and permit conditions prior to fabrication of any materials or products to be used as part of the project.

10. The contractor is responsible for independently verifying all existing onsite utilities within and adjacent to the limits of the project activities. Underground utility, structure and facility locations depicted and noted on the plans have been compiled, in part, from record mapping supplied by the respective utility companies or governmental agencies, from parol testimony, and from other sources. These locations must be considered as approximate in nature. Additionally, other such features may exist on the site, the existence of which are unknown to the Engineer.

11. The contractor is responsible for ensuring the installation of all improvements comply with all requirements of utility companies with jurisdiction and/or control of the site.

12. Locations of all existing and proposed services are approximate. Final utility service sizes and locations, including, but not limited to, the relocation and/or installation of utility poles, or the relocation and/or installation of transformers, are at the sole discretion of the respective utility companies.

13. Prior to commencement of any work, the contractor shall independently coordinate and confirm with the appropriate utility companies to finalize all utility services and/or relocations to ensure no conflict with the design plans and that proper depths can be achieved. All discrepancies must immediately be reported to the Engineer in writing. Should a conflict arise due to the final designs of the utility company, the contractor shall notify the Engineer in writing and await a written resolution prior to proceeding with further utility installations.

14. Prior to commencing construction, the contractor shall field verify all existing conditions, topographic information, utility invert elevations, and proposed layout dimensions, and must immediately notify the Engineer in writing if actual site conditions differ or are in conflict with the proposed work. No extra compensation will be paid to the contractor for work which has to be redone or repaired due to dimensions or grades shown incorrectly on these plans unless the contractor receives written permission from Owner/developer giving authorization to proceed with such additional work.

15. Where utilities are proposed to cross/traverse existing underground utilities, the elevations of the existing utilities shall be verified in the field prior to construction by excavating a test pit at the proposed utility crossing point. Should the field verified existing utility be in conflict with the proposed site designs, the contractor shall notify the Engineer in writing and shall not proceed with said utility construction until further direction is given from the Engineer.

16. At least 72 hours prior to starting any site activity or demolition, the contractor shall notify, at a minimum, the building official, municipal engineer, department of public works, planning and zoning commission, the Engineer, and local inland wetland commission, as applicable. The contractor shall also attend a pre-construction meeting with the local municipality, if required, prior to commencing any site activity or demolition.

17. Prior to starting any site activity or demolition, the contractor shall implement the soil erosion and sediment control measures as noted on the plans. Refer to the Erosion and Sedimentation Control Notes.

18. The demolition plan or existing features designated to be removed are intended to provide only general information regarding items to be demolished and/or removed. The contractor shall review all site plans (and architectural drawings as applicable) to assure that all demolition activities and incidental work necessary for the construction of the new site improvements are completed.

19. The contractor shall protect and maintain the operation and service of all active utilities and systems that are not being removed during all construction activities. Should a temporary interruption of utility services be required as part of the proposed construction activities, the contractor shall coordinate with appropriate utility companies and the affected end users to minimize impact and service interruption.

20. The contractor shall arrange for and coordinate with the appropriate utility companies for all services that require temporary or permanent termination for the project, whether shown on the site plans or not. Termination of utilities shall be performed in compliance with all local, state and/or federal regulations.

21. Contractor must prepare record drawings depicting the location of existing utilities that are capped, abandoned in place, or relocated and provide to the Owner and the Engineer of record.

22. Should hazardous material be discovered/encountered, which was not anticipated/addressed in the project plans and specifications, cease all work immediately and notify Owner and Engineer regarding the discovery of same. Do not continue work in the area until written instructions are received from an environmental professional.

23. The contractor is responsible for preventing movement, settlement, damage, or collapse of existing structures, and any other improvements that are to remain. If any existing structures that are to remain are damaged during construction, repairs shall be made using new product/materials resulting in a pre-damage condition, or better. Contractor is responsible for all repair costs. Contractor shall document all existing damage and to notify the Owner prior to the start of construction.

24. The use of explosives, if required, must comply with all local, state and federal regulations. The contractor shall obtain all permits that are required by the federal, state and local governments, and shall also responsible for all notification, inspection, monitoring or testing as may be required.

25. All debris from removal operations must be removed from the site at the time of excavation. Stockpiling of demolition debris will not be permitted. Debris shall not be burned or buried on site. All demolition materials to be disposed of, including, but not limited to, stumps, limbs, and brush, shall be done in accordance with all municipal, county, state, and federal laws and applicable codes. The contractor must maintain records of all disposal activities.

26. The contractor is responsible for repairing all damage to any existing utilities during construction, at its own expense.

27. All new utilities/services, including electric, telephone, cable tv, etc. are to be installed underground unless noted otherwise on the plans. The Contractor shall be responsible for installing all new utilities/services in accordance with the utility/service provider's written installation specifications and standards.

28. All earthwork activities must be performed in accordance with these plans and specifications and the recommendations set forth in the geotechnical report completed for this project. In the absence of a geotechnical report, all earthwork activities must comply with the standard state Department of Transportation (DOT) specifications (latest edition) and any amendments or revisions thereto. All earthwork activities must comply all applicable requirements, rules, statutes, laws, ordinances and codes for the jurisdictions where the work is being performed.

29. The contractor is responsible for removing and replacing unsuitable materials with suitable materials. All excavated or filled areas must be properly compacted. Moisture content at time of placement must be submitted in a compaction report prepared by a qualified geotechnical engineer, licensed in the state where the work is performed, verifying that all filled areas and subgrade areas within the building pad area and areas to be paved have been compacted in accordance with these plans, specifications and the recommendations. Subbase material for building pads, sidewalks, curb, or asphalt must be free of organics and other unsuitable materials. Should subbase be deemed unsuitable by Owner/developer or Owner/developer's representative, subbase is to be removed and filled with suitable material and properly compacted at the contractor's expense. All fill, compaction, and backfill materials required for utility installation must be coordinated with the applicable utility company specifications. The Engineer shall have no liability or responsibility for or as related to fill, compaction, backfill, or the balancing of earthwork.

30. Pavement must be saw cut into straight lines and must extend to the full depth of the existing pavement, except for edge of butt joints.

31. The tops of existing manholes, inlet structures, and sanitary cleanout tops must be adjusted as necessary, to match proposed grades.

32. Where retaining walls (whether or not they meet the jurisdictional definition) are identified on plans, elevations identified herein are for the exposed portion of the wall. Wall footing/foundation elevations are not identified herein and are to be set/determined by the contractor based on final structural design shop drawings prepared by an appropriate professional licensed in the state where the construction occurs.

33. Unless indicated otherwise or required by the authority having jurisdiction, all pipes shall be as follows:

    Reinforced Concrete pipe (RCP) shall meet the requirements of AASHTO M 170 Class IV with silt tight joints.

    High-Density Polyethylene pipe (HDPE) shall conform to AASHTO M 294, Type S (smooth interior with angular corrugations) with gaskets for silt tight joints.

    Polyvinyl chloride (PVC) pipe for roof drain connections shall be SDR 35 gasket pipe. Polyvinyl Chloride (PVC) pipe for sanitary sewer pipe shall be SDR 35 gasket pipe.

34. Storm sewer pipe lengths indicated are approximate and measured to the inside of inlet and/or manhole structure. Sanitary sewer pipe lengths indicated are approximate and measured to center of inlet and/or manhole structure to center of structure.

35. Stormwater roof drain locations are approximate and are based on preliminary architectural plans. Contractor is responsible for reviewing and coordinating the final architectural plans to verify final locations and sizes of all roof drains.

36. Sewers crossing streams and/or location within 10 feet of the stream embankment, or where site conditions so indicate, must be constructed of steel, reinforced concrete, ductile iron or other suitable material. Sewers conveying sanitary flow, combined sanitary and stormwater flow or industrial flow must be separated from water mains by a distance of at least 10 feet horizontally. If such lateral separations are not possible, the pipes must be in separate trenches with the sewer at least 18 inches below the bottom of the water main, or such other separation as approved by the agency with jurisdiction over same. Where appropriate separation from a water main is not possible, the sewer must be encased in concrete, or constructed of ductile iron pipe using mechanical or slip-on joints for a distance of at least 10 feet on either side of the crossing. In addition, one full length of sewer pipe should be located so both joints will be as far from the water line as possible. Where a water main crosses under a sewer, adequate structural support for the sewer must be provided.

37. Contractor's price for water service must include all fees, costs and appurtenances required by the utility to provide full and complete working service.

38. Contractor must contact the applicable water company to confirm the proper water meter and vault, prior to commencing construction. Water main and water service piping shall be installed in accordance with the requirements and specifications of the water authority having jurisdiction. In the absence of such specifications, water main piping must ductile iron (DIP) minimum Class 54. All work and materials must comply with the applicable American Water Works Association (AWWA) standards in effect at the time of the service application.

39. The contractor shall ensure that all work located in existing pavement be repaired in accordance with municipal, county and/or DOT details as applicable. Contractor is responsible to coordinate the permitting, inspection and approval of completed work with the agency having jurisdiction over the proposed work.

40. Where sump pumps are installed, all discharges must be connected to the storm sewer or discharged to an approved location.

41. For single and multi-family residential projects, spot elevation(s) adjacent to the buildings are schematic for non-specific building footprints. Grades must be adjusted based on final architectural plans and shall provide a minimum of six (6) inches below top of foundation/concrete and/or six (6) inches below the façade treatment, whichever is lower, and must provide positive drainage away from the structure (minimum of 2%). All areas shall be graded to preclude ponding adjacent to buildings, and on or adjacent to walks/driveways leading to the buildings. All construction, including grading, must comply with all applicable building codes, local, state and federal requirements, regulations and ordinances.

42. Contractor shall maintain and control traffic on and offsite in conformance with the current Federal Highway Administration (FHWA) "Manual on Uniform Traffic Control Devices" (MUTCD), and the federal, state, and local regulations for all aspects of demolition and site work. If a Maintenance of Traffic Plan is required for work that affects public travel either on or offsite, the contractor shall be responsible for the cost and implementation of said plan.

43. All temporary and permanent onsite and offsite signage and pavement markings shall conform to MUTCD, ADA, state DOT, and/or local approval requirements.

44. Contractor shall prevent the emission of dust, sediment, and debris from the site, and shall be responsible for corrective measures such as street sweeping, and clean-up work as deemed necessary by the Engineer orthe authority having jurisdiction.

45. All concrete must be air entrained with a minimum compressive strength of 4,000 psi at 28 days unless otherwise specified on the plans, details and/or geotechnical report.

46. The Engineer will review contractor submittals which the contractor is required to submit, but only for the sole purpose of checking for general conformance with the intent of the design and contract documents. The Engineer is not responsible for any deviations from the construction documents unless contractor received explicit direction to do so, in writing, from the Engineer. The contractor remains responsible for details and accuracy, for confirming and correlating all quantities and dimensions, and for techniques of assembly and/or fabrication processes.

47. All dimensions are to face of curb, edge of pavement, or edge of building, unless noted otherwise.

48. The contractor shall install and/or construct all aspects of the project in strict compliance with and accordance with manufacturer's written installation standards, recommendations and specifications.

AMERICANS WITH DISABILITY ACT NOTES TO CONTRACTOR:

The contractor shall review the proposed construction with the local building official prior to the start of construction. Contractors shall be precise in the construction of Americans with Disabilities Act (ADA) accessible parking, components, and accessible routes for the project. These components shall comply with all applicable state and local accessibility laws and regulations and the current ADA regulations and construction standards. These components include, but are not limited to the following:

- Parking spaces and parking aisles shall not exceed a 1:50 (nominally 2.0%) slope in any direction.
- Accessible routes shall be a minimum of 36" wide (unobstructed). Handrails and car overhangs may not obstruct these areas. Longitudinal slopes (direction of travel) shall not exceed 1:20 (5.0%) and shall have a cross slope no greater than 1:50 (2.0%).
- Accessible routes exceeding 1:20 (5.0%) shall be considered a "ramp". Maximum slopes of a ramp shall be 1:12 (8.3%) in the direction of travel, and a cross slope of 1:50 (2.0%). Ramps shall have maximum rise of thirty (30) inches, shall be equipped with hand rails on both sides, and landings at the top and bottom of the ramp. Landings shall not exceed 1:50 (2.0%) in any direction and have positive drainage away from the landing.
- A landing shall be provided at the exterior of all doors and at each end of ramps. Landings shall not exceed 1:50 (2.0%) in any direction and have positive drainage away from the landing and/or building. The landing shall be no less than 60 inches long unless permitted otherwise per the ADA regulations.
- Curb ramps- shall not exceed a 1:12 (8.3%) slope for a maximum length of six (6) feet or a maximum rise of six (6) inches.
- The contractor shall verify all existing elevations shown on the plan in areas of existing doorways, accessible routes or other areas where re-construction is proposed. The contractor shall immediately notify the Owner and Engineer in writing if any of the proposed work intended to meet ADA requirements is incapable of doing so, or if there is any ambiguity regarding which design components are intended to meet ADA requirements. The contractor shall not commence the work in the affected area until receiving written resolution from Engineer.

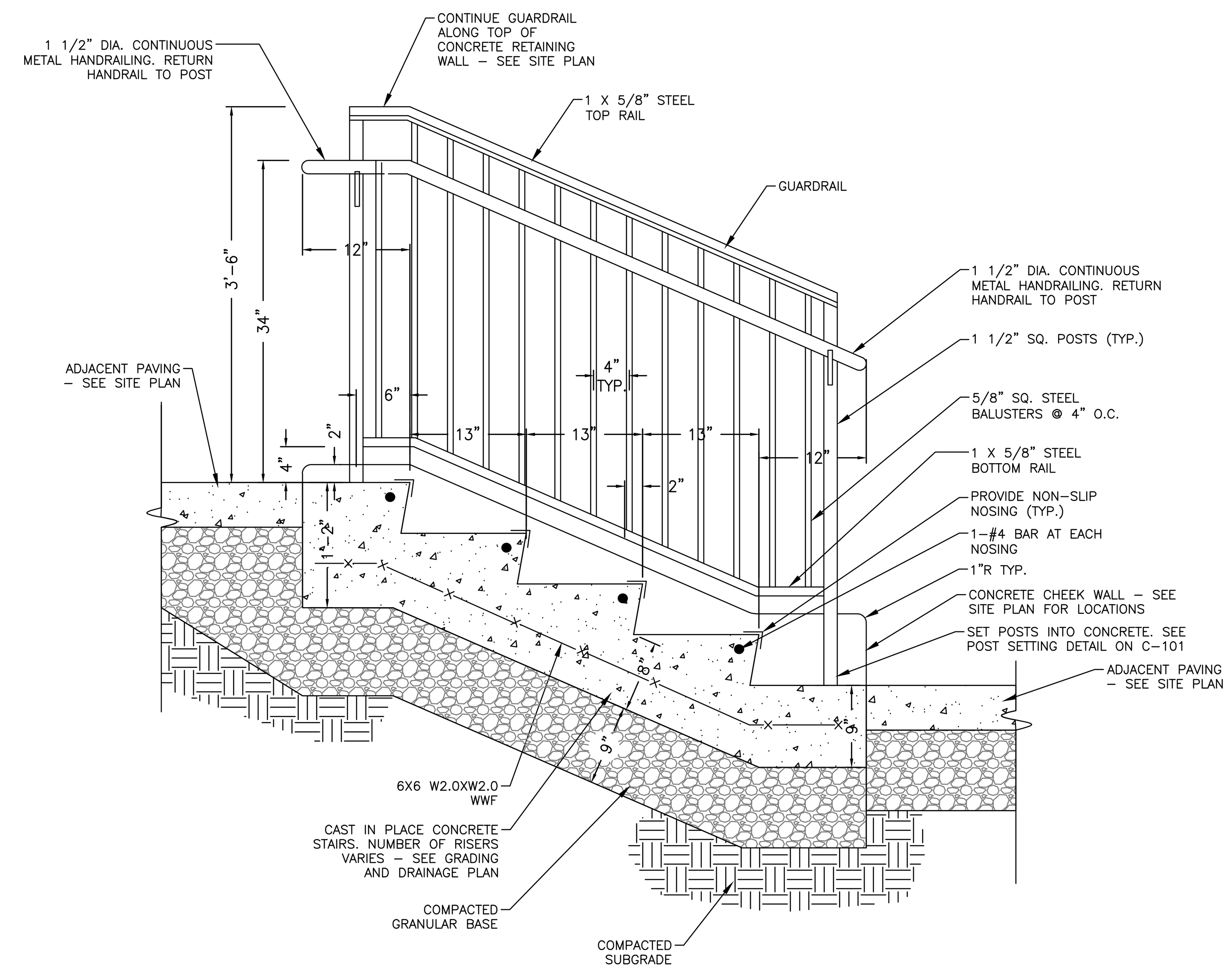

CONCRETE STAIRS WITH GUARDRAIL AND HANDRAIL

N.T.S.

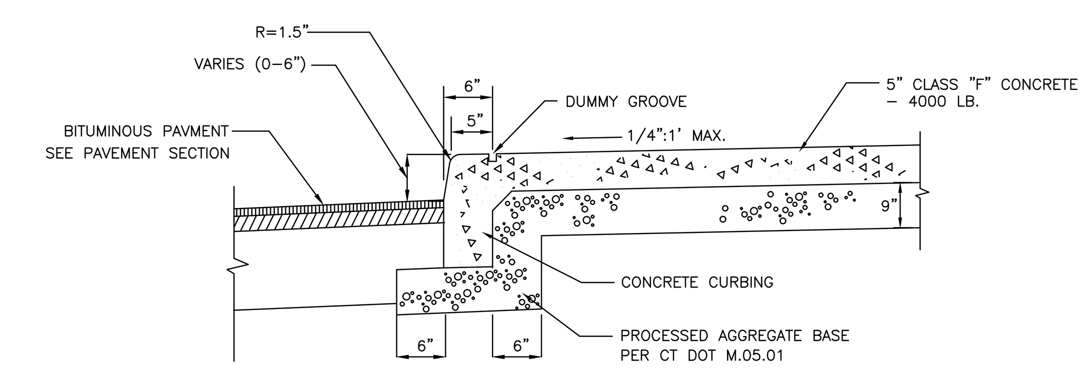

NOTES:

1. ALL CONCRETE FOR SIDEWALKS SHALL BE CLASS 'F'. MEET CONNECTICUT D.O.T. SPECIFICATIONS. REFER TO FORM 817.
2. CONCRETE SURFACE TO BE SCORED AT 5 FOOT INTERVALS.
3. EXPANSION JOINTS SHALL BE INSTALLED EVERY 15 FEET.
4. PROVIDE BROOMED FINISH PERPENDICULAR TO TRAVEL PATH

MONOLITHIC CONCRETE WALK AND CURB

N.T.S.

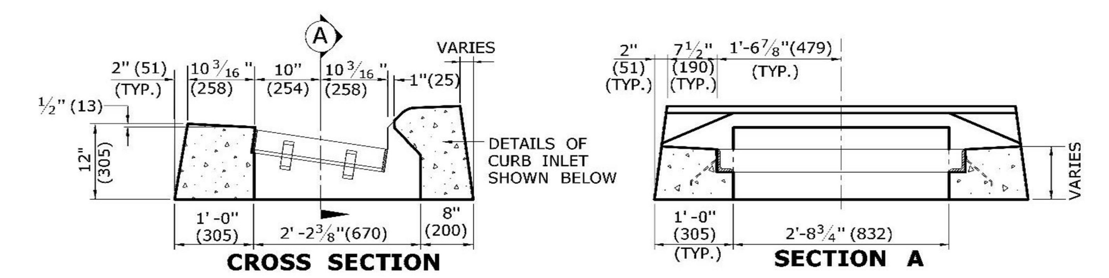

TYPE "C" CATCH BASIN TOP

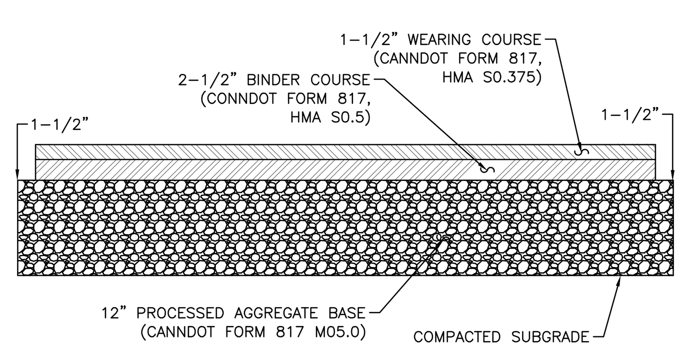

NOTES:

1. DETAIL IS PREPARED FOR PLANNING AND PURPOSES ONLY. IN THE ABSENCE OF A GEOTECHNICAL REPORT CONTRACTOR SHALL COORDINATE WITH OWNER AND DEVELOPER TO OBTAIN OR DETERMINE IF GEOTECHNICAL PAVEMENT AND SECTION DESIGNS ARE REQUIRED

BITUMINOUS CONCRETE PAVEMENT SECTION STANDARD DUTY

N.T.S.

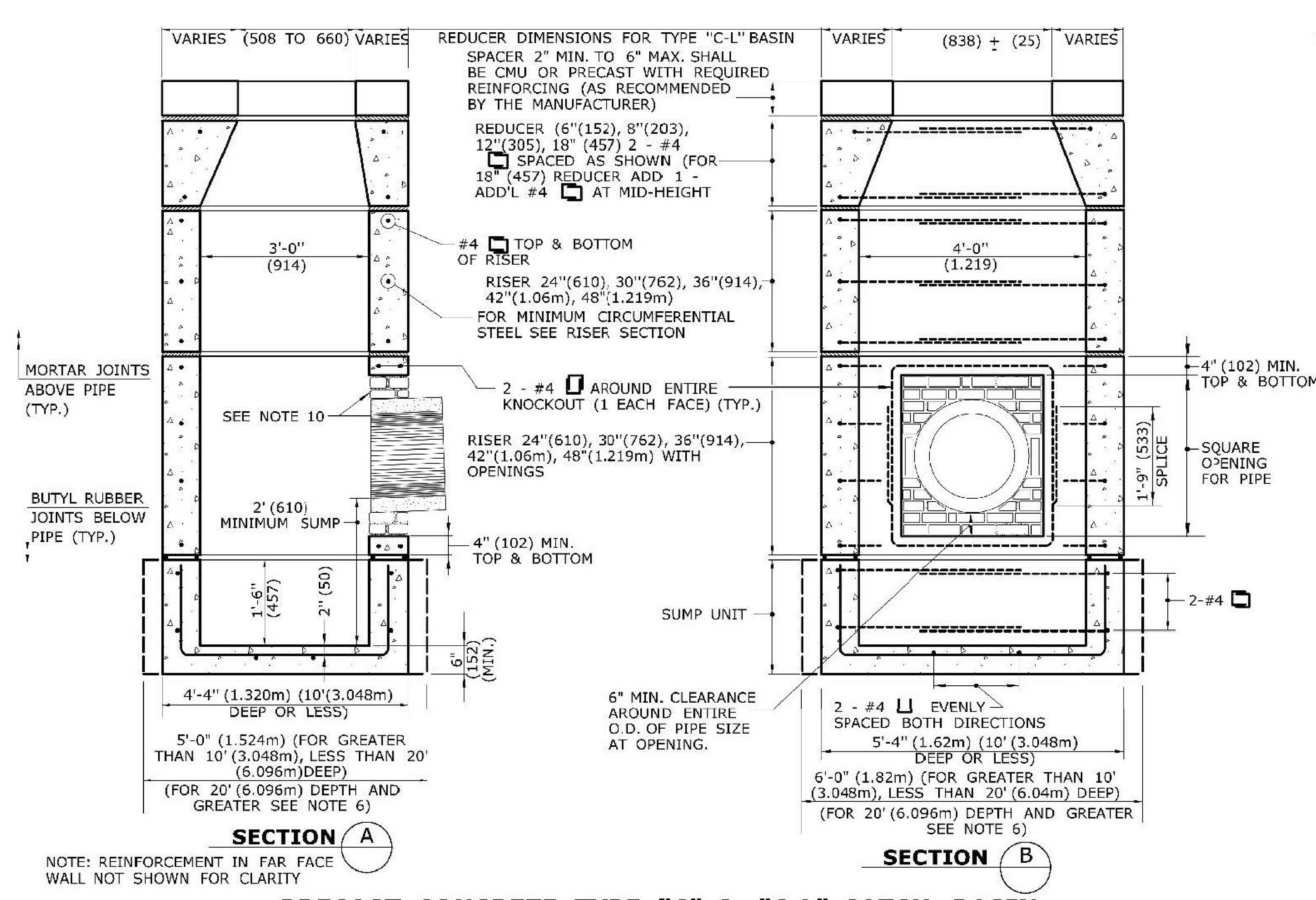

PRECAST CONCRETE TYPE "C" & "C-L" CATCH BASIN

(UNDER 10' (3.04m) DEEP SHOWN)

REFER TO CONNDOT STANDARD SHEET HW-0507-04 FOR ADDITIONAL NOTES, SECTIONS AND INSTALLATION REQUIREMENTS
REFER TO CONNDOT STANDARD SHEET HW-507-08 FOR FRAME AND GRATE REQUIREMENTS
PRECAST ROUND STRUCTURE PER CONNDOT HW-507-04 MAY BE USED/SUBSTITUTED FOR ABOVE

N.T.S.

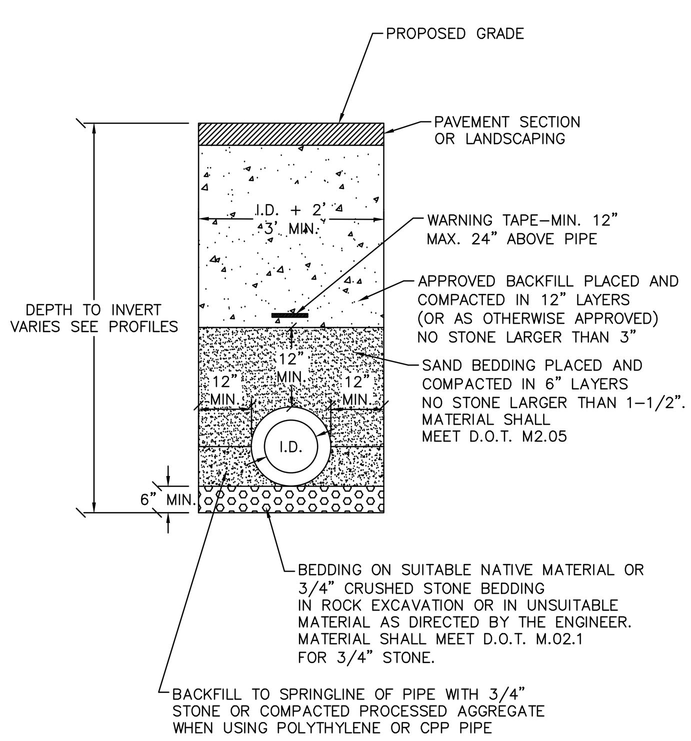

STORM SEWER TRENCH SECTION

N.T.S

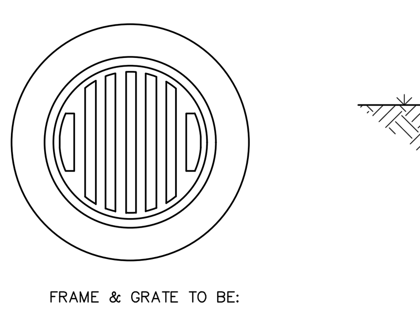

FRAME & GRATE TO BE:
NYLOPLAST DUCTILE IRON 12" STANDARD GRATE OR APPROVED EQUAL

YARD DRAIN GRATE

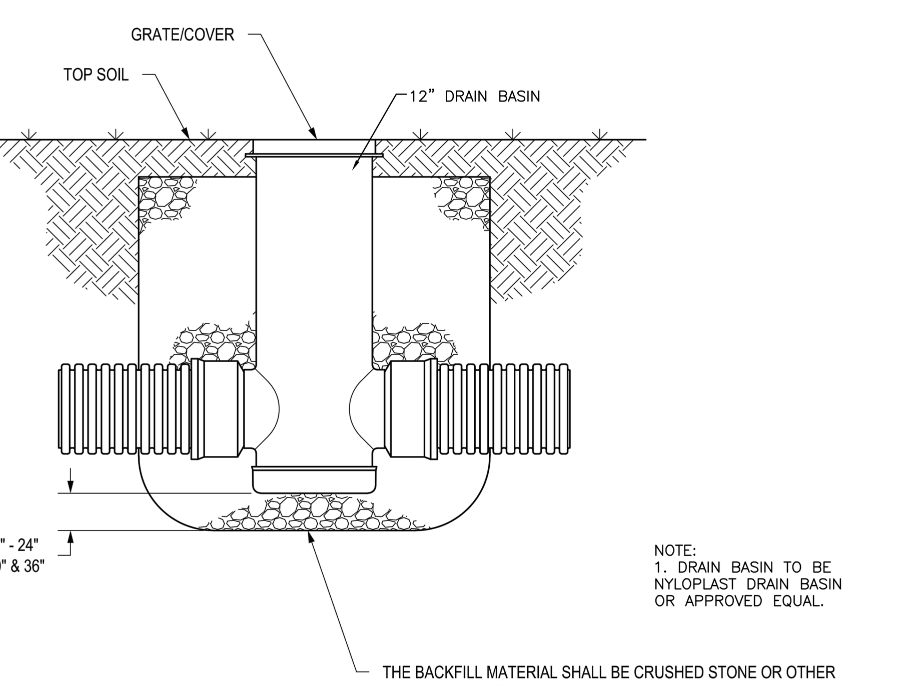

NOTE:
1. DRAIN BASIN TO BE NYLOPLAST DRAIN BASIN OR APPROVED EQUAL.

YARD DRAIN

N.T.S.

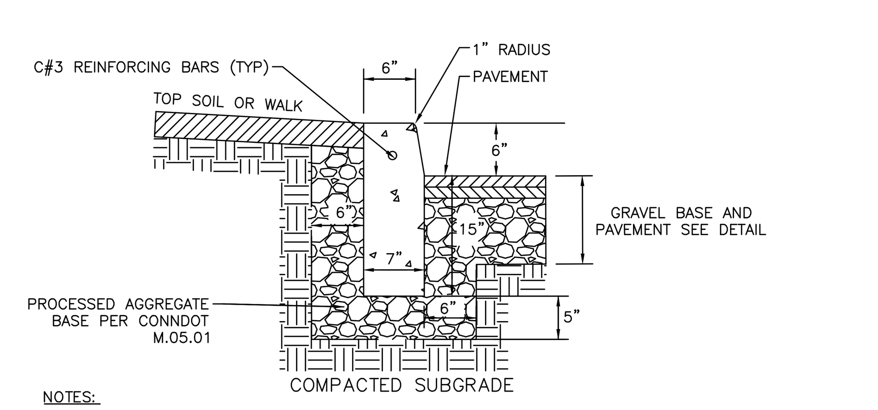

NOTES:

1. ALL CONCRETE FOR CURBS SHALL BE CLASS 'F'. MEET CONNECTICUT D.O.T. SPECIFICATIONS. REFER TO FORM 816.
2. THE END OF CURB SECTIONS SHALL BE CHAMFERED 1/4 INCH.
3. CURB, CURB CORNERS OR EDGING SHALL MATCH THE ADJACENT CURB IN SIZE, COLOR AND FINISH.
4. CURBS, CURB CORNERS OR EDGING SHALL BE FITTED TOGETHER AS CLOSELY AS POSSIBLE.
5. EXPANSION JOINTS SHALL BE INSTALLED AT A MAXIMUM OF 20 FEET ON CENTER USING PREFORMED EXPANSIONS JOINT FILLER HAVING A THICKNESS OF 1/2.
6. WHEN ABUTTING CONCRETE WALKS, INSTALL PREFORMED EXPANSIONS JOINT FILLER HAVING A THICKNESS OF 1/2 ALONG LENGTH OF WALK

PRECAST CONCRETE CURB

N.T.S.

LEGEND

EXISTING	DESCRIPTION	PROPOSED
BORINGS		
TP symbol	BORING / TEST PIT LOCATION	TP symbol
COMMUNICATION		
— — — Cx — — — Cx —	UNDERGROUND COMMUNICATION LINES	—— C ——
DOMESTIC WATER		
— — — Wx — — — Wx —	WATER MAIN	—— W ——
—— — — WSx ——	WATER SERVICE	—— WS ——
— — — Fx — — — Fx —	FIRE SERVICE LINE	—— F ——
—— — — NPWx ——	NON-POTABLE WATER LINE	—— NPW ——
symbols	WATER VALVE / FIXTURES	WV symbols
symbol	FIRE HYDRANT	symbol
LIQUID FUEL		
—— — — LFx ——	MAIN LIQUID FUEL LINE	—— LF ——
—— — — LFSx ——	LIQUID FUEL SERVICE LINE	—— LFS ——
—— — — LFa ——	LIQUID FUEL LINE, ABANDONED	
IRRIGATION		
— — — Ix — — — Ix —	IRRIGATION LINES	—— I ——
LIGHTING		
symbols	POLE / GROUND MOUNTED LIGHT	symbols
NATURAL GAS		
— — — Gx — — — Gx —	GAS MAIN	—— G ——
—— — — GSx ——	GAS SERVICE LINE	—— GS ——
POWER		
—— EOx ——	ELECTRICAL LINES, OVERHEAD	—— EO ——
—— — — EUx ——	ELECTRICAL LINES, UNDERGROUND	—— EU ——
symbol	UTILITY POLE	symbol
PROPERTY		
—— — —	PROPERTY LINE	—— — —
— — — —	EASEMENT LINE	— — — —
symbol	IRON PIPE	
symbol	IRON ROD	symbol
symbol	MONUMENT	symbol
ROADS		
—o——o—	GUARD RAIL	—•——•—
EROSION CONTROL		
	SILT FENCE	—— SF ——
SITE FEATURES		
	4" DOUBLE SOLID YELLOW LINE	DSYL
	4" SINGLE SOLID WHITE LINE	SSWL
	BIT. CONC. LIP CURB	BCLC
	PRECAST CONCRETE CURB	PCC
SANITARY SEWER		
— — — Sx — — — Sx —	SANITARY SEWER MAIN	—— S ——
— — — SSx — — — SSx —	SANITARY SEWER SERVICE LINE	—— SS ——
symbol	SANITARY SEWER MANHOLE	symbol
STORM SEWER		
- - - - - - -	STORM DRAIN PIPE	symbol
— — — RLx — — — RLx —	ROOF LEADER	—— RL ——
— — — UD — — — UD —	UNDERDRAIN	— — UD — — UD —
symbol	STORM DRAIN MANHOLE	symbol
symbol	CURB INLET	symbol
symbol	CATCH BASIN	symbol
symbol	YARD DRAIN	symbol
TOPOGRAPHY		
— — — — 95— — — —	CONTOUR	—— 95 ——
×61.95	SPOT ELEVATION	95
OTHER		
	RAMP	R
	LANDSCAPE AREA	LSA

THE ARCHITECTS
Robert B. Hurd, AIA
56 Arbor Street
Hartford, CT 06106
Tel: 860-232-2707

Crosskey Architects LLC
Architecture Preservation Interiors
750 Main Street, Hartford, CT 06103
T: (860)724-3000 F: (860)724-3013

CITIZEN'S BLOCK

28-34 PARK PLACE, VERNON CT

Owner: Town of Vernon - Administration

NOT FOR CONSTRUCTION

Drawn: GM
Issued: 03-17-21
Status:

Revisions

NO	DATE	DESCRIPTION

PROPERTY OWNER:
TOWN OF VERNON
14 PARK PLACE
VERNON, CT 06066

APPLICANT:
TOWN OF VERNON
14 PARK PLACE
VERNON, CT 06066
860-870-3599

Design Professionals INC.
CIVIL & TRAFFIC ENGINEERS / LAND SURVEYORS
PLANNERS / LANDSCAPE ARCHITECTS
21 JEFFREY DRIVE
P.O. BOX 1167
SOUTH WINDSOR, CT 06074
860-291-8755 - T
860-291-8757 - F
www.designprofessionalsinc.com

C-200

NOTES & DETAILS

Copyright © 2020

File: C:\Jobs\4033\Engineering\AutoCAD\4033 Details.dwg Layout: 07 C-D1 Plotted: 3/16/2021 2:46 PM Last Saved: 3/12/2021 5:23 PM Last Saved By: glenmartin

KEY

	STONE MASONRY
	CMU MASONRY
	CONCRETE
	BRICK MASONRY
(E) OR	EXISTING
(N) OR	NEW
LD	LEDGER, SEE SECTION

FOUNDATION AND SLAB NOTES

1. SEE GENERAL NOTES ON DRAWING S-P2-2.0 AND PROJECT SPECIFICATIONS FOR ADDITIONAL NOTES.
2. NEW 4" SLAB ON GRADE IS TO BE REINFORCED WITH 6x6 W2.9xW2.9 WELDED WIRE FABRIC.
3. FOOTING SIZES ARE BASED ON AN ASSUMED 2.0 TSF BEARING CAPACITY ON NATURAL SOIL AT LEAST 2'-0" BELOW ANY FILL OR ON BEDROCK.
4. FOOTINGS SHALL BE STEPPED DOWN TO MEET LOWER ELEVATION (IF FOUND) EXTERIOR FOUNDATION WALLS 2:1 HOR/VERT.
5. PROVIDE FREE DRAINING COMPACTED GRAVEL UNDER ALL NEW SLABS ON GRADE AND PROVIDE 15 MIL POLYETHYLENE VAPOR BARRIER.
6. WELDED WIRE FABRIC AND REINFORCING BARS IN SLABS ON GRADE SHALL BE HELD SECURELY IN PLACE ON APPROVED CHAIR SUPPORTS.
7. PROVIDE CONTROL JOINTS IN SLAB ON GRADE. SUBMIT LOCATIONS FOR APPROVAL.
8. FINISH TOP SURFACE OF SLAB TO ACHIEVE FLATNESS OF ⅛" IN 10'-0" AND 1/16" IN 2'-0" MAXIMUM. PERFORM FLATNESS AND LEVELNESS TESTING UPON COMPLETION OF SLAB CURING AND PRIOR TO FRAMING, PROVIDE REPORT TO DESIGNER FOR REVIEW.

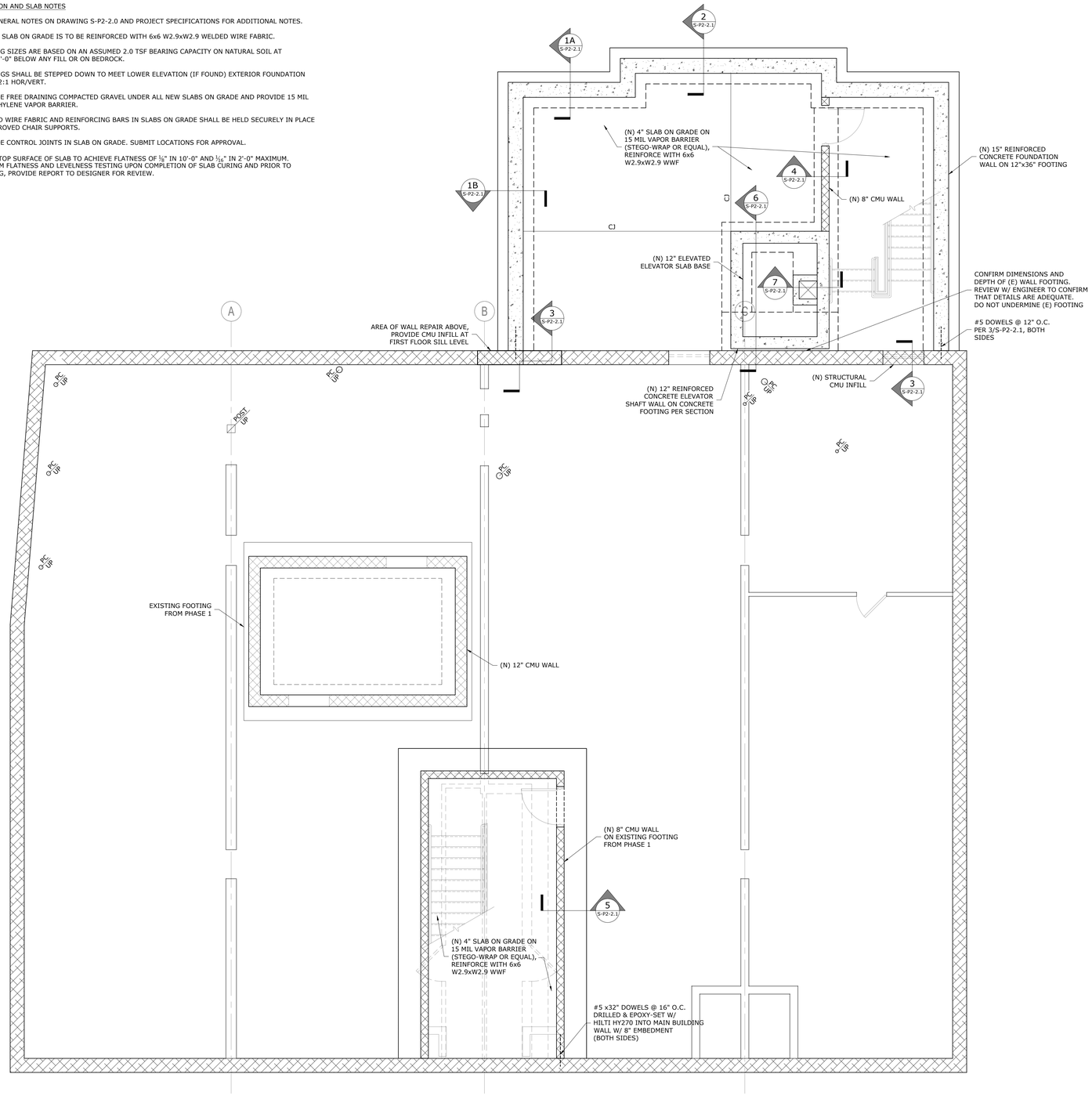

FOUNDATION PLAN
¼" = 1'-0"

BASEMENT

THE ARCHITECTS
THE INTEGRITY. THE ABILITY. THE EXPERIENCE.
THE ARCHITECTS
Robert B. Hurd, AIA
56 Arbor Street
Hartford, CT 06106
Tel: 860-232-2707

Crosskey Architects LLC
Architecture Preservation Interiors
750 Main Street, Hartford, CT 06103
T: (860)724-3000 F: (860)724-3013

CIRRUS STRUCTURAL ENGINEERING
CIRRUS STRUCTURAL ENGINEERING, LLC
19 Lower Woodland Terrace
Columbia, CT 06237
T 860.337.0200 | F 860.471.8138
www.cirrusseng.com

CITIZEN'S BLOCK

28-34 PARK PLACE, VERNON CT

Owner: Town of Vernon - Administration

NOT FOR CONSTRUCTION

Drawn:
Issued: 03-17-21
Status:

Revisions

NO	DATE	DESCRIPTION

S-P2-1.0
FOUNDATION PLAN

Copyright © 2020

KEY

	STONE MASONRY
	CMU MASONRY
	CONCRETE
	BRICK MASONRY
(E) OR	EXISTING
(N) OR	NEW
LD	LEDGER, SEE SECTION

PLAN NOTES:

1. SEE DRAWING S-P2-2.0 FOR STRUCTURAL GENERAL NOTES AND TYPICAL DETAILS.
2. CONTRACTOR SHALL VERIFY STRUCTURE, DIMENSIONS AND SIZES IN THE FIELD. DO NOT SCALE OFF THIS DRAWING.
3. STRUCTURE SIZES NOTED AGAINST EXISTING MEMBERS HAVE BEEN GATHERED THROUGH FIELD MEASUREMENTS. NOTIFY THE ARCHITECT IMMEDIATELY IF EXISTING STRUCTURE DIFFERS FROM THAT SHOWN ON THE DRAWINGS.

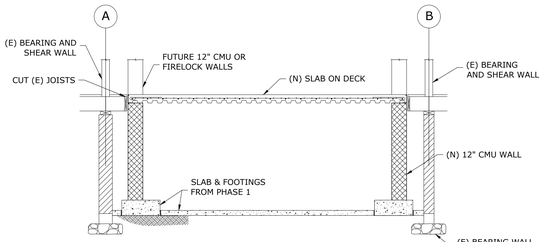

1 S-P2-1.1 CROSS SECTION THROUGH VAULT
¼" = 1'-0" (EAST-WEST)

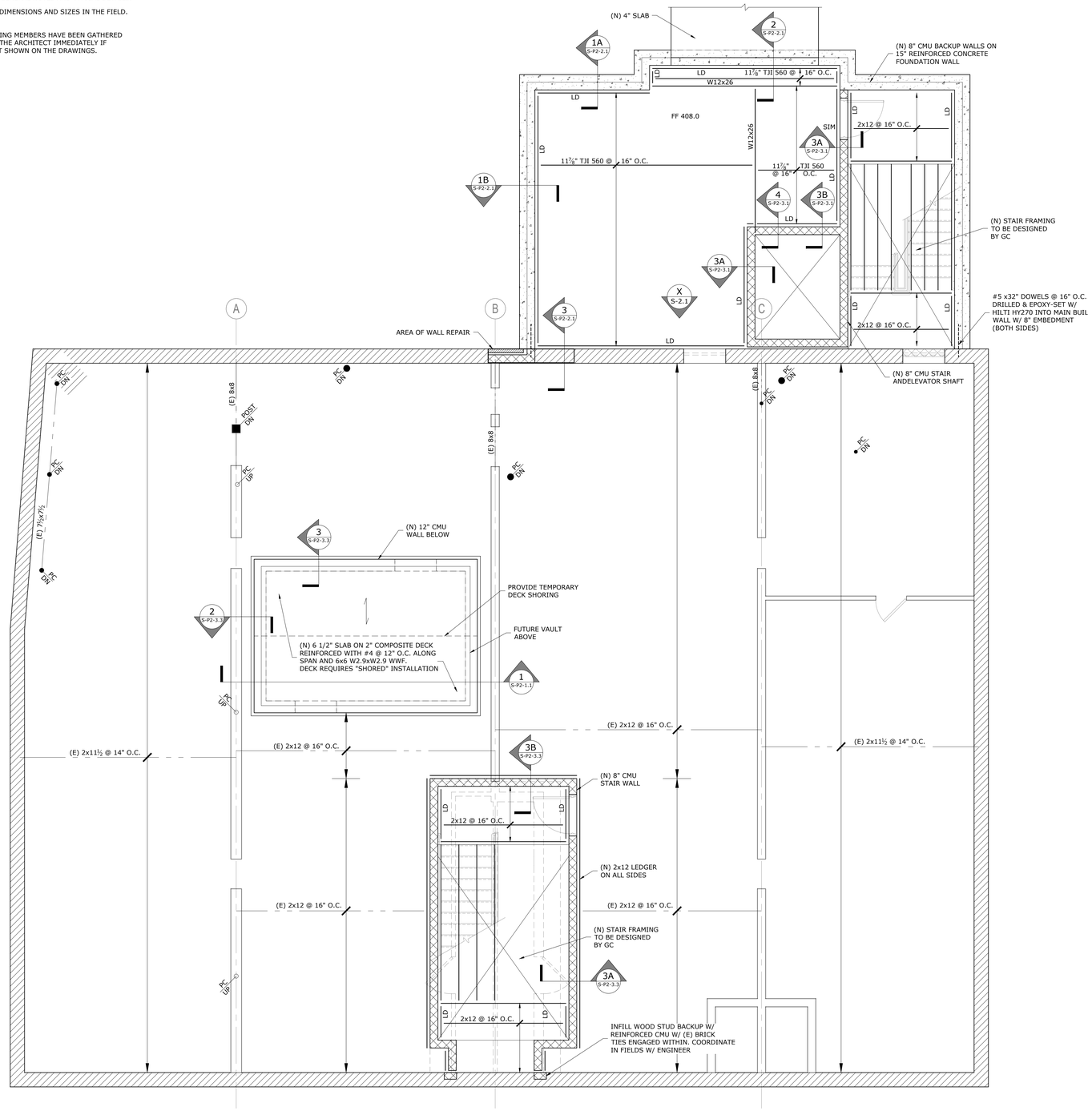

FIRST FLOOR FRAMING PLAN
¼" = 1'-0"

NORTH

BASEMENT

THE ARCHITECTS
The Integrity. The Ability. The Experience.
THE ARCHITECTS
Robert B. Hurd, AIA
56 Arbor Street
Hartford, CT 06106
Tel: 860-232-2707

Crosskey Architects LLC
Architecture Preservation Interiors
750 Main Street, Hartford, CT 06103
T: (860)724-3000 F: (860)724-3013

CIRRUS STRUCTURAL ENGINEERING
CIRRUS STRUCTURAL ENGINEERING, LLC
19 Lower Woodland Terrace
Columbia, CT 06237
T 860.337.0200 | F 860.471.8138
www.cirrusseng.com

CITIZEN'S BLOCK

28-34 PARK PLACE, VERNON CT

Owner: Town of Vernon - Administration

NOT FOR CONSTRUCTION

Drawn:
Issued: 03-17-21
Status:

Revisions

NO	DATE	DESCRIPTION

S-P2-1.1
FIRST FLOOR FRAMING PLAN

Copyright © 2020

KEY

	STONE MASONRY
	CMU MASONRY
	CONCRETE
	BRICK MASONRY
(E) OR	EXISTING
(N) OR	NEW
LD	LEDGER, SEE SECTION

PLAN NOTES:

1. SEE DRAWING S-P2-2.0 FOR STRUCTURAL GENERAL NOTES AND TYPICAL DETAILS.
2. CONTRACTOR SHALL VERIFY STRUCTURE, DIMENSIONS AND SIZES IN THE FIELD. DO NOT SCALE OFF THIS DRAWING.
3. STRUCTURE SIZES NOTED AGAINST EXISTING MEMBERS HAVE BEEN GATHERED THROUGH FIELD MEASUREMENTS. NOTIFY THE ARCHITECT IMMEDIATELY IF EXISTING STRUCTURE DIFFERS FROM THAT SHOWN ON THE DRAWINGS.

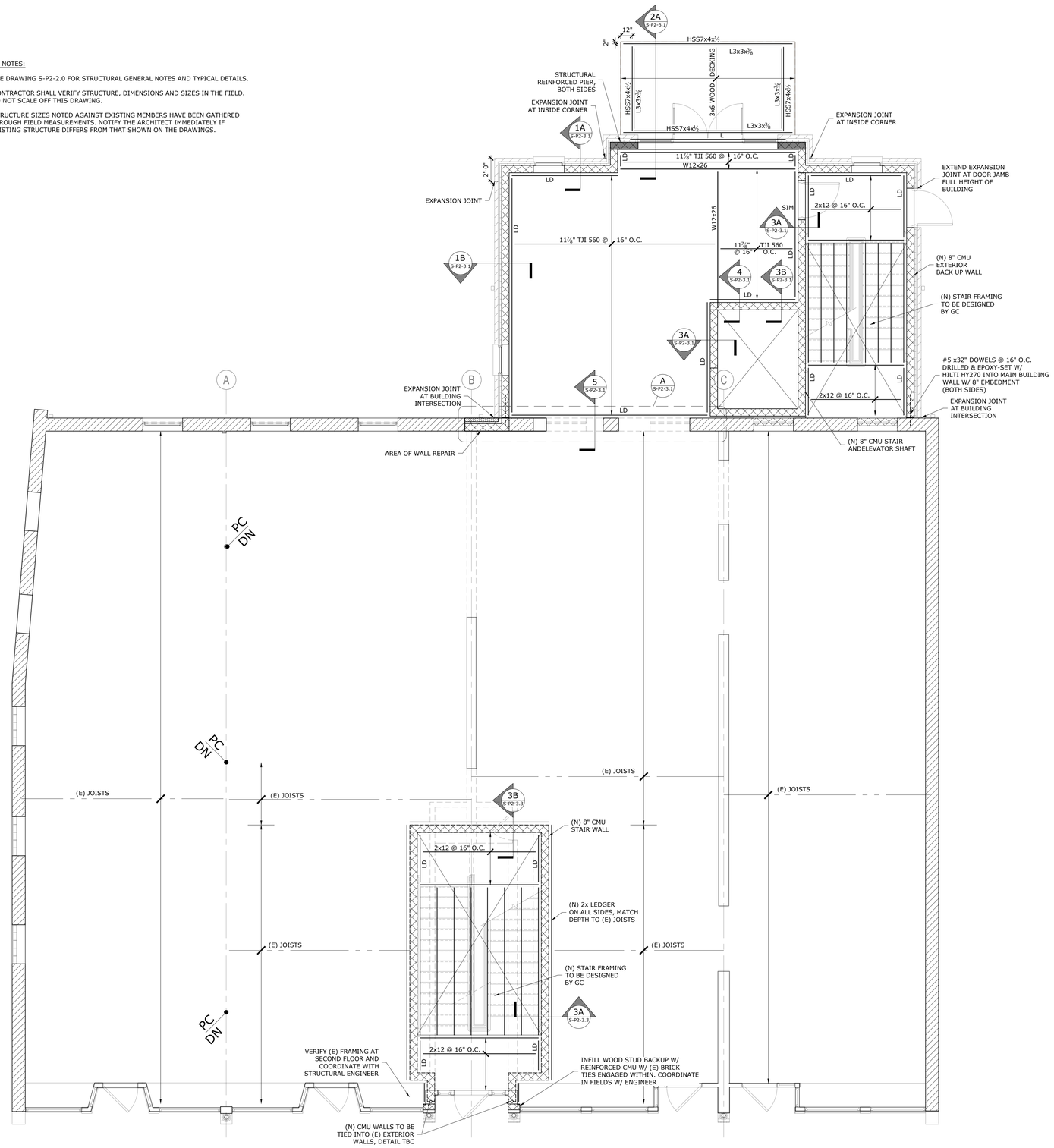

SECOND FLOOR FRAMING PLAN

¼" = 1'-0"

NORTH

FIRST

THE ARCHITECTS
THE INTEGRITY. THE ABILITY. THE EXPERIENCE
THE ARCHITECTS
Robert B. Hurd, AIA
56 Arbor Street
Hartford, CT 06106
Tel: 860-232-2707

Crosskey Architects LLC
Architecture Preservation Interiors
750 Main Street, Hartford, CT 06103
T: (860)724-3000 F: (860)724-3013

CIRRUS STRUCTURAL ENGINEERING
CIRRUS STRUCTURAL ENGINEERING, LLC
19 Lower Woodland Terrace
Columbia, CT 06237
T 860.337.0200 | F 860.471.8138
www.cirrusseng.com

CITIZEN'S BLOCK

28-34 PARK PLACE, VERNON CT

Owner: Town of Vernon - Administration

NOT FOR CONSTRUCTION

Drawn:
Issued: 03-17-21
Status:

Revisions

NO	DATE	DESCRIPTION

S-P2-1.2

SECOND FLOOR FRAMING PLAN

Copyright © 2020

KEY

	STONE MASONRY
	CMU MASONRY
	CONCRETE
	BRICK MASONRY
(E) OR	EXISTING
(N) OR	NEW
LD	LEDGER, SEE SECTION

PLAN NOTES:

1. SEE DRAWING S-P2-2.0 FOR STRUCTURAL GENERAL NOTES AND TYPICAL DETAILS.
2. CONTRACTOR SHALL VERIFY STRUCTURE, DIMENSIONS AND SIZES IN THE FIELD. DO NOT SCALE OFF THIS DRAWING.
3. STRUCTURE SIZES NOTED AGAINST EXISTING MEMBERS HAVE BEEN GATHERED THROUGH FIELD MEASUREMENTS. NOTIFY THE ARCHITECT IMMEDIATELY IF EXISTING STRUCTURE DIFFERS FROM THAT SHOWN ON THE DRAWINGS.

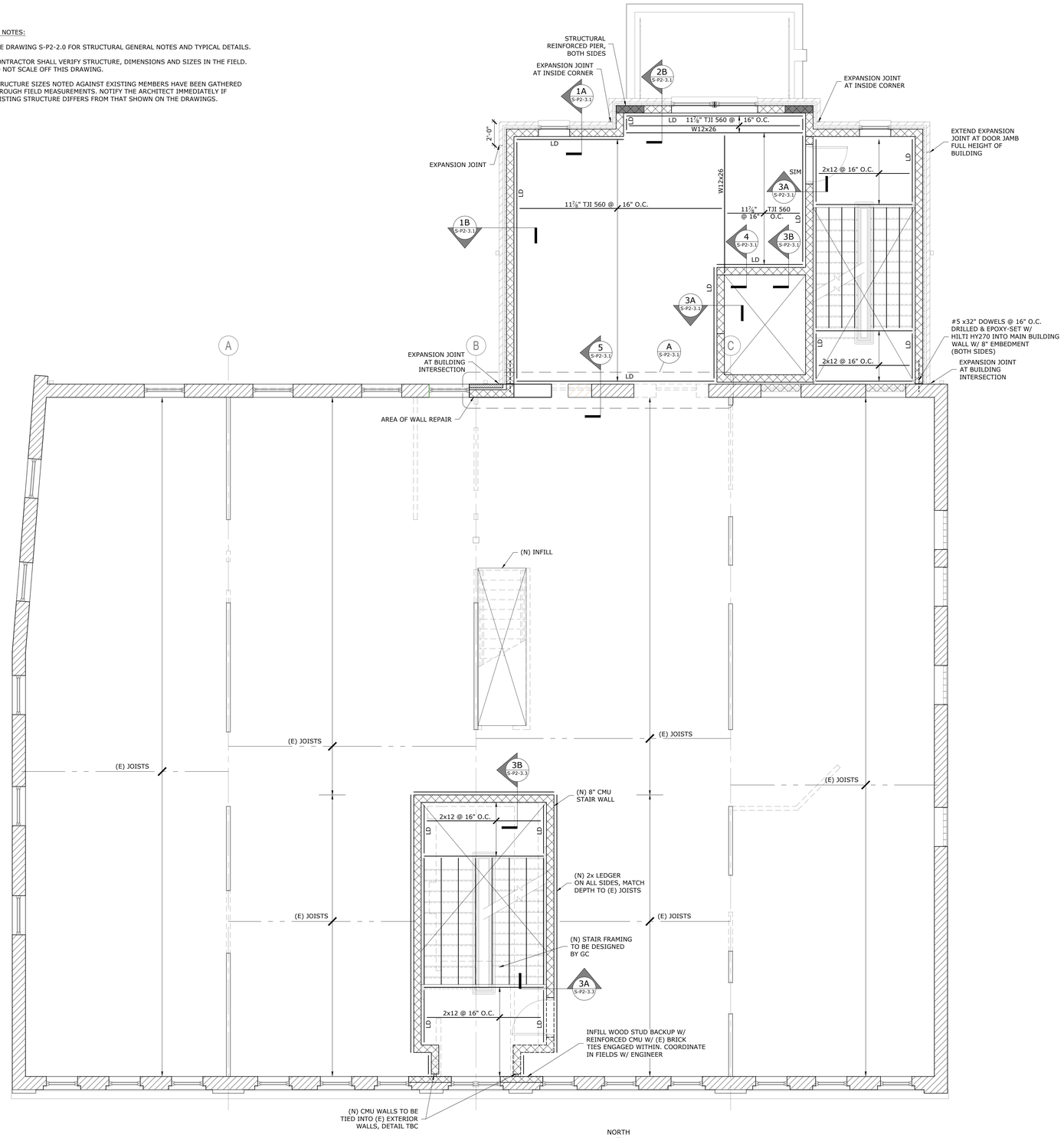

THIRD FLOOR FRAMING PLAN

¼" = 1'-0"

SECOND

THE ARCHITECTS
THE INTEGRITY. THE ABILITY. THE EXPERIENCE
THE ARCHITECTS
Robert B. Hurd, AIA
56 Arbor Street
Hartford, CT 06106
Tel: 860-232-2707

Crosskey Architects LLC
Architecture Preservation Interiors
750 Main Street, Hartford, CT 06103
T: (860)724-3000 F: (860)724-3013

CIRRUS STRUCTURAL ENGINEERING
CIRRUS STRUCTURAL ENGINEERING, LLC
19 Lower Woodland Terrace
Columbia, CT 06237
T 860.337.0200 | F 860.471.8138
www.cirrusseng.com

CITIZEN'S BLOCK

28-34 PARK PLACE, VERNON CT

Owner: Town of Vernon - Administration

NOT FOR CONSTRUCTION

Drawn:
Issued: 03-17-21
Status:

Revisions

NO	DATE	DESCRIPTION

S-P2-1.3

THIRD FLOOR FRAMING PLAN

Copyright © 2020

KEY

	STONE MASONRY
	CMU MASONRY
	CONCRETE
	BRICK MASONRY
(E) OR	EXISTING
(N) OR	NEW
LD	LEDGER, SEE SECTION

PLAN NOTES:

1. SEE DRAWING S-P2-2.0 FOR STRUCTURAL GENERAL NOTES AND TYPICAL DETAILS.
2. CONTRACTOR SHALL VERIFY STRUCTURE, DIMENSIONS AND SIZES IN THE FIELD. DO NOT SCALE OFF THIS DRAWING.
3. STRUCTURE SIZES NOTED AGAINST EXISTING MEMBERS HAVE BEEN GATHERED THROUGH FIELD MEASUREMENTS. NOTIFY THE ARCHITECT IMMEDIATELY IF EXISTING STRUCTURE DIFFERS FROM THAT SHOWN ON THE DRAWINGS.

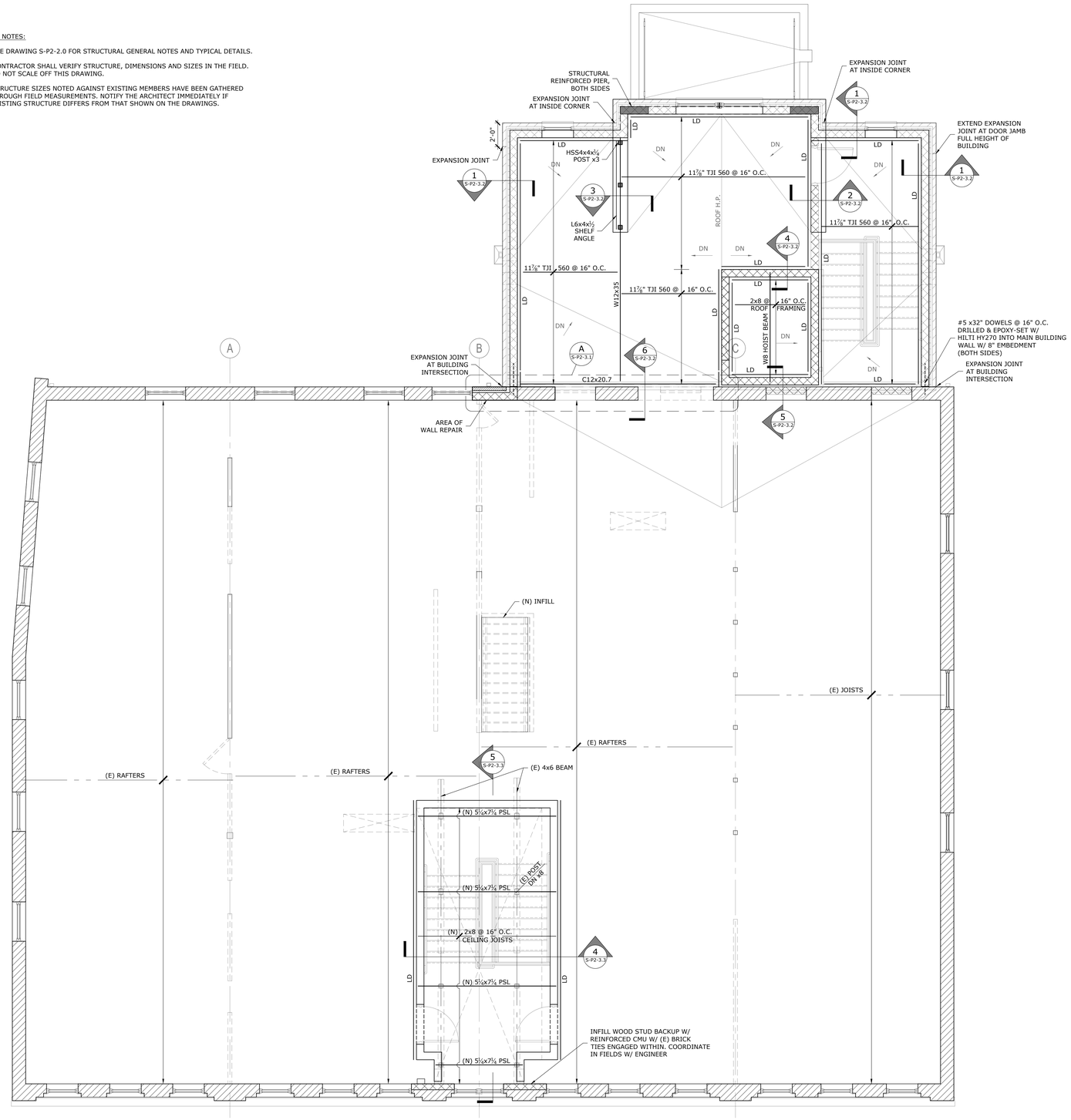

ROOF FRAMING PLAN

¼" = 1'-0"

THIRD

THE ARCHITECTS
The Integrity. The Ability. The Experience.
THE ARCHITECTS
Robert B. Hurd, AIA
56 Arbor Street
Hartford, CT 06106
Tel: 860-232-2707

Crosskey Architects LLC
Architecture Preservation Interiors
750 Main Street, Hartford, CT 06103
T: (860)724-3000 F: (860)724-3013

CIRRUS STRUCTURAL ENGINEERING
CIRRUS STRUCTURAL ENGINEERING, LLC
19 Lower Woodland Terrace
Columbia, CT 06237
T 860.337.0200 | F 860.471.8138
www.cirrusseng.com

CITIZEN'S BLOCK

28-34 PARK PLACE, VERNON CT

Owner: Town of Vernon - Administration

NOT FOR CONSTRUCTION

Drawn:
Issued: 03-17-21
Status:

Revisions

NO	DATE	DESCRIPTION

S-P2-1.4

ROOF FRAMING PLAN

Copyright © 2020

STRUCTURAL GENERAL NOTES

GENERAL

1. ALL WORK SHALL COMPLY WITH THE FOLLOWING:
   CONNECTICUT STATE BUILDING CODE.
   AWS STRUCTURAL WELDING CODE
   AISC SPECIFICATION FOR THE DESIGN, FABRICATION, ERECTION OF TRUCTURAL STEEL FOR BUILDINGS.

2. ALL STRUCTURAL WORK SHALL BE COORDINATED BETWEEN ALL RELATED TRADES.

3. ALL DETAILS SHALL BE CONSIDERED TYPICAL AND APPLICABLE TO ALL SIMILAR CONDITIONS UNLESS OTHERWISE NOTED OR INDICATED.

4. THE CONTRACTOR SHALL COORDINATE INSPECTIONS OF STRUCTURE TO MEET THE REQUIREMENTS OF THE CONNECTICUT STATE BUILDING CODE AND REFERENCED STANDARDS. THE CONTRACTOR SHALL NOT PROCEED WITH ANY WORK THAT OTHERWISE CONCEALS ITEMS SCHEDULED FOR INSPECTION UNTIL INSPECTION HAS BEEN COMPLETED.

5. CONTRACTOR SHALL BE SOLELY RESPONSIBLE FOR MAINTAINING THE SAFETY AND STABILITY OF THE STRUCTURE, ITS OCCUPANTS, AND ALL ADJACENT STRUCTURES DURING ALL PHASES OF THE WORK, AND SHALL CORRECT ANY DEFECTS OR DAMAGE WHICH RESULTS FROM HIS ACTIONS.

6. SEE ARCHITECTURAL, MECHANICAL AND ELECTRICAL DRAWINGS AND SPECIFICATIONS FOR DIMESNIONS AND DETAILS REQUIRED AS STRUCTURAL WORK BUT WHICH ARE NOT SHOWN ON STRUCTURAL DRAWINGS.

7. SEE SPECIFICATIONS GOVERNING DETAILING, FABRICATION, ERECTION AND INSTALLATION OF ALL STRUCTURAL STEEL, CONCRETE AND WOOD FRAMED CONSTRUCTION.

DESIGN LOADS

THE FOLLOWING LOADS ARE CONSIDERED:

DEAD LOADS
   WEIGHT OF BUILDING COMPONENTS
LIVE LOADS:
   NEW ADDITION FLOOR = 100 PSF UNLESS NOTED OTHERWISE
SNOW LOADS
   GROUND SNOW LOAD, PG = 30 PSF
   SNOW EXPOSURE FACTOR, CE = 1.0
   THERMAL COEFFICIENT, CT = 1.0
   IMPORTANCE FACTOR, I = 1.0
   SNOW DRIFTS LOADS: PER ASCE 7
WIND LOADS
   BASIC WIND SPEED = 105 MPH
   OCCUPANCY CATEGORY = II
   EXPOSURE CATEGORY = B
   IMPORTANCE FACTOR, I = 1.0
SEISMIC LOADS
   SEISMIC USE GROUP: I
   SEISMIC DESIGN CATEGORY = B
   IMPORTANCE FACTOR, I = 1.0
   SITE CLASSIFICATION = C
   SHORT PERIOD SPECTRAL ACCELERATION, SS = 0.177
   LONG PERIOD SPECTRAL ACCELERATION, S1 = 0.064

FOUNDATIONS

1. FOOTINGS SHALL BEAR ON UNDISTURBED MATERIAL OR ON COMPACTED STRUCTURAL BACKFILL. FOUNDATION SIZES ARE BASED ON 2.0 TSF BEARING CAPACITY.

2. ALL STRUCTURAL FILL WITHIN THE BUILDING LIMITS SHALL BE PLACED IN MAXIMUM 12 INCH THICK LIFTS AND SHALL BE COMPACTED TO 95 PERCENT OF ITS MAXIMUM DRY DENSITY DETERMINED IN ACCORDANCE WITH ASTM D1557.
STRUCTURAL FILL SHALL MEET THE FOLLOWING GRADATION REQUIREMENTS:
   SIEVE SIZE PERCENT PASSING BY WEIGHT
   4 INCH 100
   1 /2 INCH 50-85
   NO. 4 90-75
   NO. 40 10-35
   NO. 200 0-8

3. MAKE NO EXCAVATIONS TO THE FULL DEPTH INDICATED WHEN FREEZING TEMPERATURE MAY BE EXPECTED, UNLESS THE FOUNDATIONS OR SLABS CAN BE PLACED IMMEDIATELY AFTER THE EXCAVATION HAS BEEN COMPLETED. PROTECT THE BOTTOM SO EXCAVATED FROM FROST IF PLACING OF CONCRETE IS DELAYED. SHOULD PROTECTION FAIL, REMOVE FROZEN MATERIALS AND REPLACE WITH CONCRETE OR GRAVEL FILL, AS DIRECTED, AT NO COST TO OWNER.

4. FOOTINGS SHALL BE PROTECTED AGAINST FROST UNTIL PROJECT IS COMPLETED.

5. UNLESS OTHERWISE NOTED, FOOTINGS SHALL BE CENTERED UNDER SUPPORTED MEMBERS.

6. BACKFILLING SHALL BE DONE SIMULTANEOUSLY ON BOTH SIDES OF THE BUILDING IN ORDER TO MINIMIZE UNBALANCED EARTH PRESSURES.

7. CONTRACTOR SHALL CONTROL SURFACE AND SUBSURFACE WATER DURING CONSTRUCTION SO THAT FOUNDATION WORK WILL BE DONE IN DRY AND ON UNDISTURBED SOILS. MAINTAIN GROUNDWATER ELEVATION OUTSIDE SITE TO AVOID SETTLEMENT AND DAMAGE OF NEARBY BUILDINGS AND STRUCTURES.

8. EXTERIOR OR PERIMETER WALL FOOTINGS SHALL BE BACKFILLED WITH IMPERVIOUS FILL TO CREATE A GROUNDWATER SEAL.

REINFORCED CONCRETE

1. ALL CONCRETE IS DESIGNED BY ULTIMATE STRENGTH METHODS PER ACI 318 AND SHALL BE NORMAL WEIGHT (UNLESS INDICATED AS LIGHT WEIGHT ON PLANS) AIR ENTRAINED WITH 28 DAY COMPRESSIVE STRENGTH AS FOLLOWS:

   FOUNDATION WALLS AND SLABS ON GRADE 4000 PSI

2. ALL REINFORCING BARS SHALL BE HIGH STRENGTH DEFORMED BARS ASTM A 615-GRADE 60 U.N.O.

3. DETAIL ALL BARS IN ACCORDANCE WITH "ACI DETAILING MANUAL - 1988". SHOW ON THE PLACING DRAWINGS THE NUMBER AND LOCATION OF ALL BAR SUPPORTS AND ACCESSORIES NECESSARY TO SUPPORT REINFORCEMENT IN POSITIONS INDICATED.

4. MINIMUM CONCRETE PROTECTION FOR REINFORCEMENT WHEN NOT OTHERWISE INDICATED SHALL BE:

   CONCRETE POURED AGAINST EARTH 3"

   CONCRETE POURED IN FORMS BUT EXPOSED TO EARTH OR WEATHER:

   BARS #5 AND SMALLER 1-1/2"

   BARS LARGER THAN #5 2"

5. NO SPLICES OF REINFORCEMENT SHALL BE MADE EXCEPT AS DETAILED OR APPROVED BY THE STRUCTURAL ENGINEER. REBAR DEVELOPMENT/SPLICE LENGTH SHALL BE AS SHOWN ON TYPICAL DETAIL ON S2.1. MAKE ALL BARS CONTINUOUS AROUND CORNERS.

6. WIRE MESH REINFORCEMENT MUST LAP ONE FULL MESH AT SIDE AND END LAPS, AND SHALL BE WIRED TOGETHER. PROVIDE ADEQUATE SUPPORTS FOR MESH TO INSURE ITS LOCATION AS SHOWN ON DRAWINGS.

7. CONCRETE TO BE EXPOSED TO THE WEATHER IN THE FINISHED PROJECT SHALL BE AIR-ENTRAINED. SEE SPECIFICATIONS.

8. SIZE OF CONCRETE PLACEMENTS AND POURING INTERVALS SHALL, UNLESS SHOWN ON THE DRAWINGS, BE AS FOLLOWS:

   (A) SLABS ON GRADE 3O FT MAXIMUM PANEL DIMENSION. 3 DAYS MINIMUM BETWEEN ADJACENT POURS.

   (B) WALLS BELOW GRADE 40 FT MAXIMUM PANEL LENGTH UNLESS CONTROL JOINTS OCCUR AT NOT OVER 40' O.C. 5 DAYS MINIMUM BETWEEN ADJACENT POURS.

9. CONCRETE SHALL BE PLACED WITHOUT HORIZONTAL CONSTRUCTION JOINTS EXCEPT WHERE SHOWN OR NOTED . VERTICAL CONSTRUCTION JOINTS AND STOPS IN CONCRETE WORK SHALL BE MADE AT MID-SPAN OR AT POINTS OF MINIMUM SHEAR.

10. SLAB-ON-GRADE SHALL BE PLACED IN ALTERNATE PANELS NOT EXCEEDING 1200 SQUARE FEET.

11. AGGREGATE SIZE SHALL NOT EXCEED ONE THIRD THE DEPTH OF SLABS, ONE FIFTH THE WIDTH BETWEEN FORMS, THREE QUARTERS THE CLEAR DISTANCE BETWEEN REINFORCING BARS OR 1-½ INCHES. PROVIDE SMALLER SIZE WHERE NECESSARY.

WOOD FRAMING

1. WOOD FRAME CONSTRUCTION SHALL CONFORM TO "NATIONAL DESIGN SPECIFICATION FOR WOOD CONSTRUCTION".

2. CONVENTIONAL LUMBER MEMBERS NOTED AS "P/T" AND/OR IN DIRECT CONTACT WITH EXTERIOR MASONRY OR CONCRETE, OR EXPOSED TO THE EXTERIOR ELEMENTS SHALL BE PRESSURE PRESUERVATIVE TREATED WITH CCA. EXTERIOR MASONRY OR CONCRETE IS DEFINED AS THAT WHICH IS NOT HEATED OR PROTECTED FROM WEATHER ON ALL SIDES OR SURFACES.

3. "PSL" FRAMING AS NOTED SHALL BE "PARALLAM" PARALLEL STRAND LUMBER AS MANUFACTURED BY TRUS JOIST - MACMILLAN, OR EQUIVALENT.

4. "LVL" FRAMING AS NOTED SHALL BE "MICROLAM" LAMINATED VENEER LUMBER AS MANUFACTURED BY TRUS JOIST - MACMILLAN OR EQUIVALENT.

5. "LSL" FRAMING AS NOTED SHALL BE "TIMBERSTRAND" LAMINATED STRAND LUMBER AS MANUFACTURED BY TRUS JOIST - MACMILLAN OR EQUIVALENT.

6. "PSL" LUMBER FRAMING NOTED AS "P/T" AND/OR IN DIRECT CONTACT WITH EXTERIOR MASONRY OR CONCRETE, OR EXPOSED TO THE EXTERIOR ELEMENTS SHALL BE PRESSURE PRESUERVATIVE TREATED WITH CCA ("WOLMANIZED"). EXTERIOR MASONRY OR CONCRETE IS DEFINED AS THAT WHICH IS NOT HEATED OR PROTECTED FROM WEATHER ON ALL SIDES OR SURFACES.

7. FLOOR DECKING SHALL BE 3/4" TONGUE-AND-GROOVE CDX PLYWOOD GLUED AND NAILED TO SUPPORTING FRAMING.

8. PROVIDE 1/2" UNDERLAYMENT OVER ALL STRUCTURAL WOOD PLANK AND PLYWOOD DECK SURFACES.

9. ROOF SHEATHING SHALL BE 5/8 TONGUE-AND-GROOVE CDX PLYWOOD NAILED TO SUPPORTING FRAMING.

10. ALL SLEEPERS, SILLS, NAILERS, AND PLATES IN CONTACT WITH MASONRY OR CONCRETE SHALL BE PRESSURE PRESERVATIVE TREATED SYP NO. 2 OR BETTER.

11. PROVIDE STANDARD GALVANIZED METAL CONNECTORS FOR ALL FLUSH FRAMED BEAM AND JOIST APPLICATIONS. CAPACITIES SHALL BE SUITABLE FOR THE MEMBER AND SPAN AND SHALL BE NOTED ON THE SHOP DRAWINGS FOR ALL MANUFACTURED WOOD PRODUCTS AS WELL AS IN CUT SHEETS FOR GENERAL CONVENTIONAL FRAMING USE.

12. PROVIDE HURRICANE CLIPS AT ALL RAFTER AND ROOF JOIST ENDS, FASTENED TO SUPPORTING FRAMING WITH A CLEAR LOAD PATH TO THE GROUND.

13. LAMINATE MULTI-PLY LVL BEAMS WITH 3 ROWS OF 16 D NAILS AT 12" O.C. PER PLY, OR WITH TWO ROWS OF 1/2" DIA. THROUGH BOLTS AT 12" O.C. AS PER MANUFACTURER'S REQUIREMENTS. PROVIDE 4 ADDITIONAL BOLTS EACH SIDE OF SIDE SUPPORTED BEAM CONNECTIONS.

14. NAIL ALL OTHER FRAMING AND PLYWOOD SHEATHING AND DECKING IN ACCORDANCE WITH THE INTERNATIONAL RESIDENTIAL CODE (IRC) AND INDUSTRY STANDARDS.

15. PROVIDE PSL RIM BOARDS, SQUASH BLOCKS AND CRIPPLES IN FLOOR FRAMING ABOVE AND BELOW WALLS TO PROVIDE CONTINUOUS, UNREDUCED BEARING AREAS OF STUDS AND POSTS THROUGH FLOOR SYSTEMS.

16. PROVIDE AT LEAST THE EQUIVALENT NUMBER OF STANDARD SPACED STUDS DISPLACED FROM OPENING WIDTHS AS JACK STUDS ON SIDES OF OPENINGS. PROVIDE 10" MIN. HEADERS OF LSL IN NON-BEARING WALLS AND HEADERS OF LVL IN BEARING WALLS OF DEPTH EQUIVALENT TO THAT OF FLOOR JOISTS.

17. PROVIDE SOLID, 5 1/2" MINIMUM DEEP BEARING FOR ALL BEAMS AND HEADERS, INTERRUPTING RIM BOARDS WHERE NECESSARY. PROVIDE POSTS AND JACKS DIRECTLY BELOW ALL BEAM AND HEADER BEARINGS OF TOTAL WIDTH NOT LESS THAN THAT OF BEAM OF HEADER BEARING.

18. PROVIDE ALL FRAMING IN ACCORDANCE WITH PROPER AND STANDARD PRACTICE, AND ALL GOVERNING CODES. CONTRACTOR SHALL BE PREPARED TO CORRECT ANY UNSUITABLE CONDITIONS PER THE DIRECTION OF THE ARCHITECT.

19. JOIST CONSTRUCTION SPANNING OVER 8' MUST HAVE SOLID 2X BRIDGING AT NO MORE THAN 8' O.C.

20. USE DOUBLE JOISTS UNDER ALL PARALLEL PARTITIONS.

21. PARTITIONS AND OUTSIDE STUD WALLS SHALL BE BRIDGED ONCE IN THEIR STORY HEIGHT OR AT LEAST EVERY 6'-0".

22. PLYWOOD SHALL BE LAID WITH FACE GRAIN PARALLEL TO SPAN; STAGGER ALL JOINTS.

TEMPORARY SHORING AND BRACING

1. PROVIDE AND INSTALL TEMPORARY SHORING DESIGNED TO SUPPORT THE TEMPORARY STRUCTURAL LOADS OF THE SUPPORTED ITEMS. SUBMIT SHORING PRODUCTS, CONFIGURATION AND PROCEDURE, TO THE ENGINEER FOR RECORD AND REVIEW.

2. SHORING SHALL BE OF ANY MATERIAL WHICH IS SUITABLE FOR THE APPLICATION. TIMBER SHORING SHALL BE FULLY DRIED AND ALL END GRAIN SHALL BE SEALED TO PREVENT FLUCTUATIONS IS MOISTURE CONTENT. SHORING SHALL BE MADE STABLE, STIFF, AND SNUG FITTING SO AS NOT TO DEFLECT UNDER LOAD. PRE LOAD SUPPORTED ELEMENTS FOR SNUG FIT ONLY. SHORING SHALL ALLOW DEFLECTION OF NO MORE THAN THE GIVEN SPAN LENGTH DIVIDED BY 360 OR APPROPRIATE FOR THE MATERIAL.

3. BEARING SURFACES OF SHORING SHALL BE REVIEWED WITH ENGINEER AND SHALL TO PROVIDE FOR PROPER TRANSFER OF LOADS TO SUPPORTING AND SUPPORTED ELEMENTS.

MASONRY

1. CONCRETE MASONRY UNITS SHALL BE TYPE N-1 CONFORMING TO ASTM C90-5. MORTAR SHALL BE TYPE M OR S, CONFORMING TO ASTM C270-82. MINIMUM COMPRESSIVE STRENGTH, F'M, SHALL BE 1500 PSI.

2. FILL CELLS CONTAINING VERTICAL REINFORCING WITH GROUT. USE CENTERING DEVICES TO KEEP REINFORCING PROPERLY POSITIONED IN CELL.

3. ALL CONCRETE MASONRY SHALL HAVE 9 GAGE WIRE REINFORCEMENT IN HORIZONTAL BED JOINTS AT 16" O.C. VERTICAL SPACING. REINFORCING MAY BE TRUSS OR LADUR. PROVIDE L AND T REINFORCING UNITS AT CORNERS AND INTERSECTIONS AND LAP SPLICE REINFORCING AT DISCONTINUITIES.

STEEL

1. ALL STRUCTURAL STEEL WORK SHALL CONFORM TO THE SPECIFICATIONS FOR DESIGN, FABRICATION AND ERECTION OF STRUCTURAL STEEL USING THE MANUAL OF STRUCTURAL STEEL CONSTRUCTION, 13TH EDITION, BY THE AMERICAN INSTITUTE OF STEEL CONSTRUCTION.

2. SHOP CONNECTIONS MAY BE WELDED OR BOLTED UNLESS THE CONNECTION METHOD IS SPECIFICALLY NOTED ON THE DRAWINGS. MAKE BOLTED CONNECTIONS WITH 3/4" DIAMETER ASTM BOLTS.

3. UNLESS OTHERWISE SHOWN, PROVIDE ½" THICK STIFFENER PLATES ON EACH SIDE OF BEAMS WHEN A COLUMN OCCURS ABOVE OR BELOW BEAMS.

4. FURNISH ANGLE LINTELS OVER ALL OPENINGS IN MASONRY WALLS AND PARTITIONS, INCLUDING OPENINGS AT DOORS, WINDOWS, RECESSES, DUCTS, VENTS, ETC. PROVIDE ONE ANGLE FOR EACH 4" OF MASONRY.

SPAN	LINTEL	BEARING
UP TO 4'-6"	L 3 1/2 X 3 1/2 X 5/16	6"
4'-6" TO 5'-6"	L 4 X 3 1/2 X 5/16	6"
5'-6" TO 6'-6"	L 5 X 3 1/2 X 5/16	6"
6'-6" TO 7'-6"	L 6 X 3 1/2 X 5/16	8"

5. SPECIAL LINTELS ARE DETAILED ON THE DRAWINGS. LINTELS AT OPENINGS IN EXTERIOR WALLS SHALL BE HOT-DIP GALVANIZED.

6. PUNCH OR DRILL STEEL FOR 1/2" BOLTS FOR ALL BLOCKING AND ACCESSORIES AS INDICATED ON THE DRAWINGS AND SPECIFICATIONS. SEE ARCHITECTURAL DRAWINGS AND SPECS. WHERE NOT SPECIFICALLY INDICATED, STEEL SHALL BE PUNCHED 2'-6" O.C. STAGGERED.

7. PROVIDE ANCHORS @ 16" O.C. FOR MASONRY ON ALL STEEL BEAMS AND COLUMNS WHICH ABUT MASONRY WALLS. ANCHORS TO BE WELDED TO MEMBERS BEFORE PAINTING OR GALVANIZING. COORDINATE WITH MASONRY WORK.

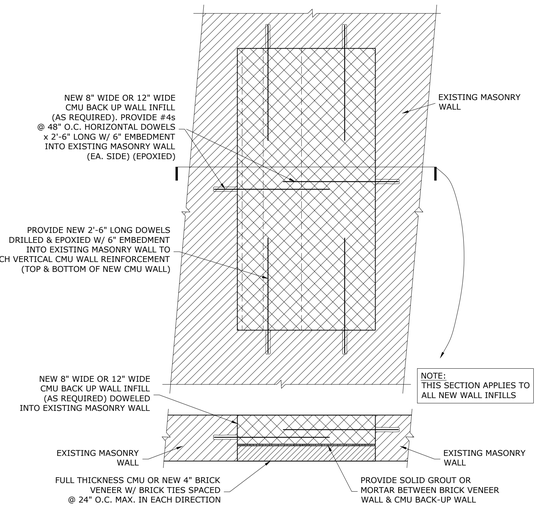

TYPICAL NEW CMU WALL INFILL DETAIL AT EXISTING MASONRY OPENINGS

¾" = 1'-0"

REFER TO ARCH DWGS FOR NEW WALL INFILL LOCATIONS

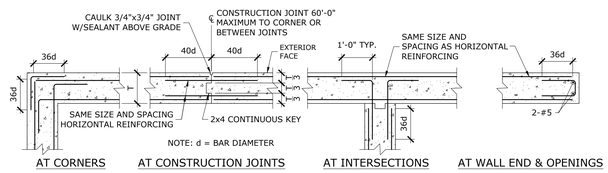

TYPICAL FOUNDATION WALL DETAILS

N.T.S.

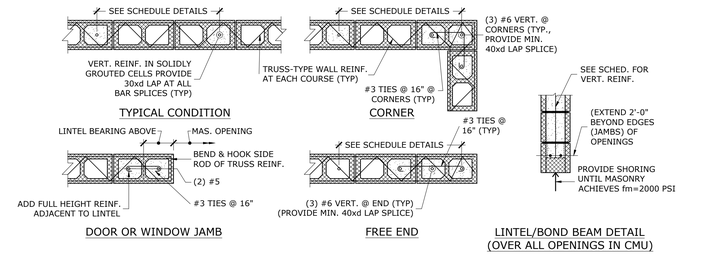

TYPICAL CMU MASONRY DETAILS

N.T.S.

MINIMUM CONCRETE MASONRY WALL REINFORCING SCHEDULE

WALL LOCATION	WALL THICKNESS (NOMINAL)	VERT REINFORCEMENT		HORIZ/TRUSS-TYPE REINFORCEMENT
ALL EXTERIOR WALLS, STAIR SHAFTS AND ELEVATOR SHAFTS. ALL LOAD BR'G WALLS (UNLESS OTHERWISE NOTED)	8"	#5 @ 24"	U.O.N.	2-#5 @ FLOOR & MID-FLOOR LEVELS IN BOND BEAMS, 9 GA LADDER TYPE @ 16" O.C.
	10"	#5 @ 16"	U.O.N.	2-#5 @ FLOOR & MID-FLOOR LEVELS IN BOND BEAMS, 9 GA LADDER TYPE @ 16" O.C.
	12"	#6 @ 24"	U.O.N.	2-#5 @ FLOOR & MID-FLOOR LEVELS IN BOND BEAMS, 9 GA LADDER TYPE @ 16" O.C.
ALL OTHER INT. CMU WALLS	ALL SIZES	#5 @ 48"		9 GA LADDER TYPE @ 16" O.C.
NOTE: REFER TO PLANS & SECTIONS FOR ANY REINFORCING REQUIREMENTS MORE STRINGENT THAN IN THIS SCHEDULE				

REINFORCED MASONRY LINTEL SCHEDULE

MASONRY OPENING WIDTH (L)	LINTEL SIZE (4", 6", 8", 10" & 12" NOMINAL WIDTHS)
0<L≤6'-0"	8" HIGH "U" BLOCK W/ 2-#5
6'-0"<L≤12'-0"	16" HIGH "U" BLOCK W/ 2-#5
12'-0"<L≤13'-6"	16" HIGH "U" BLOCK W/ 2-#6

NOTES:

1. PROVIDE BLOCK LINTELS INTEGRAL WITH WALL CONSTRUCTION FOR ALL OPENINGS IN NEW MASONRY.

2. LINTELS ABOVE ARE FOR CONDITIONS WITHOUT CONCENTRATED LOADS WITHIN A TRIANGULAR AREA ABOVE THE LINTEL (BASE = L. HEIGHT = L2).

3. CONTINUE BARS 2'-0" BEYOND EACH SIDE OF THE OPENING.

4. PROVIDE 2-#5 VERTICAL BARS IN GROUTED CELLS ON EACH SIDE OF THE OPENING AND CONTINUE 2'-0" ABOVE THE LINTEL.

5. PROVIDE SHORING UNDER LINTELS UNTIL MASONRY ASSEMBLY REASONS lm' = 1500 PSI.

6. HORIZONTAL BARS TO BE NO MORE THAN 3½" ABOVE BOTTOM OF THE LINTEL.

MINIMUM SPLICE & DEVELOPMENT LENGTH

(UNLESS OTHERWISE SHOWN ON DRAWINGS)

(fy = 60 ksi, f'c = 4000 psi)

		#3	#4	#5	#6	#7	#8	#9	#10	#11
SPLICE LENGTH	TOP BARS	18"	24"	30"	36"	42"	51"	64"	82"	100"
	OTHER BARS	14"	18"	24"	28"	32"	39"	49"	63"	77"
DEVELOPMENT LENGTH	TOP BARS	14"	18"	24"	28"	32"	39"	49"	63"	77"
	OTHER BARS	12"	14"	18"	21"	25"	30"	38"	48"	59"

AVOID SPLICES IN REGIONS OF MAX. MOMENT. IF THIS IS NOT POSSIBLE STAGGER SPLICES SO THAT NOT MORE THAN 50% ARE WITHIN A REQUIRED LAP LENGTH; OTHERWISE INCREASE SPLICE LENGTHS BY 30%.

TYPICAL MINIMUM REINFORCEMENT DEVELOPMENT, SPLICE LENGTHS AND NOTES (CONCRETE f'c=4000-PSI)

LOOSE LINTEL SCHEDULE

MASONRY OPENING	LINTEL SIZE
UP TO 3'-0"	L3½x 3½x 5/16
3'-1" TO 4'-6"	L4x 3½x 5/16 (4" LEG VERT.)
4'-7" TO 6'-0"	L5x 3½x 5/16 (5" LEG VERT.)
6'-1" TO 8'-0"	L6x 3½x 5/16 (6" LEG VERT.)

NOTES:
1. PROVIDE LINTELS OVER ALL MASONRY OPENINGS EXCEPT WHERE LINTEL BLOCKS ARE PROVIDED.
2. PROVIDE ONE ANGLE FOR EACH 4" OF WALL THICKNESS. FOR 6" WALLS PROVIDE TEE OR BUILT-UP SECTION WITH PROPERTIES EQUAL TO OR GREATER THAN 1½" TIMES ANGLE PROPERTIES FOR 4" WALL THICKNESS.
3. ALL LINTELS SHALL BE GALVANIZED.
4. PROVIDE 8" OF BEARING EACH END OF ALL LINTELS.

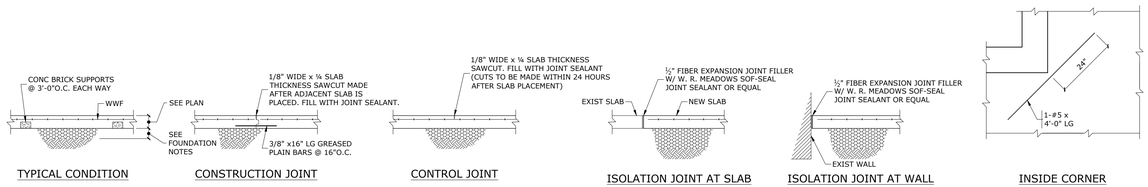

TYPICAL CONCRETE SLAB-ON-GRADE DETAILS

½" = 1'-0"

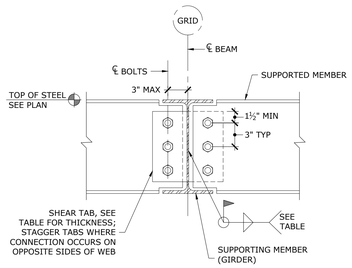

TYPICAL BEAM CONNECTION

TYPICAL CONNECTION

MEMBER DEPTH	ROWS OF ¾"Ø BOLTS	℄ THICKNESS	WELD
W8, W10	2	¼"	¼"
W12, W14	3	¼"	¼"
W16	4	¼"	¼"
W18	5	¼"	¼"

FLOOR/ROOF SHEATHING SCHEDULE

LOCATION	WOOD SHEATHING THICKNESS	NAIL SIZE	EDGE NAIL		FIELD NAIL	BOUNDARY NAIL	EDGE BLOCK
			CONT EDGE	OTHER EDGE			
ROOF	19/32"	10d	6"	6"	12"	6"	NO
FLOOR	23/32"	10d	6"	6"	12"	6"	SEE PLANS

SHEATHING NOTES:

1. MINIMUM NAIL PENETRATION INTO FRAMING: 8d - 1½", 10d - 1⅝"
2. USE COMMON NAILS (8d DIAMETER = 0.131", 10d DIAMETER = 0.148")
3. ALL WOOD FLOOR SHEATHING SHALL BE GLUED AND NAILED. USE A CONSTRUCTION ADHESIVE.
4. PROVIDE (2) ROWS OF BOUNDARY NAILING STAGGERED OVER INTERIOR SHEAR WALLS AT FLOOR AND ROOF.
5. SEE GENERAL STRUCTURAL NOTES FOR ADDITIONAL REQUIREMENTS.

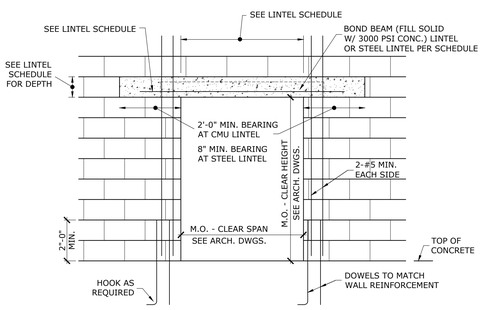

TYPICAL OPENING IN CMU WALL DETAIL

½" = 1'-0"

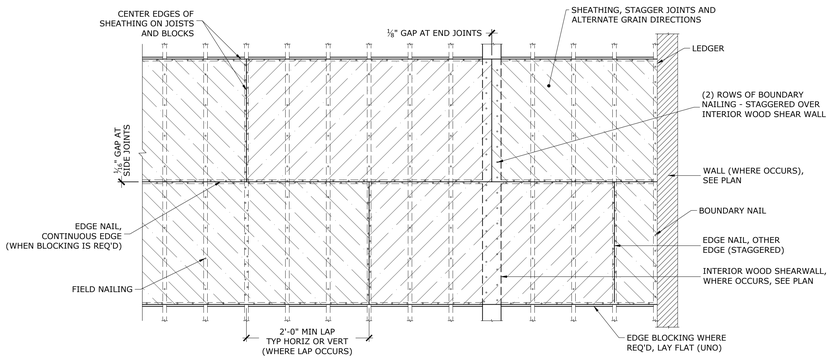

FLOOR/ROOF SHEATHING SCHEDULE

NTS PLAN VIEW

THE ARCHITECTS
THE INTEGRITY. THE ABILITY. THE EXPERIENCE
THE ARCHITECTS
Robert B. Hurd, AIA
56 Arbor Street
Hartford, CT 06106
Tel: 860-232-2707

Crosskey Architects LLC
Architecture Preservation Interiors
750 Main Street, Hartford, CT 06103
T: (860)724-3000 F: (860)724-3013

CIRRUS STRUCTURAL ENGINEERING
CIRRUS STRUCTURAL ENGINEERING, LLC
19 Lower Woodland Terrace
Columbia, CT 06237
T 860.337.0200 | F 860.471.8138
www.cirrusseng.com

CITIZEN'S BLOCK

28-34 PARK PLACE, VERNON CT

Owner: Town of Vernon - Administration

NOT FOR CONSTRUCTION

Drawn:
Issued: 03-17-21
Status:

Revisions

NO	DATE	DESCRIPTION

S-P2-2.0

TYPICAL SECTIONS AND DETAILS

Copyright © 2020

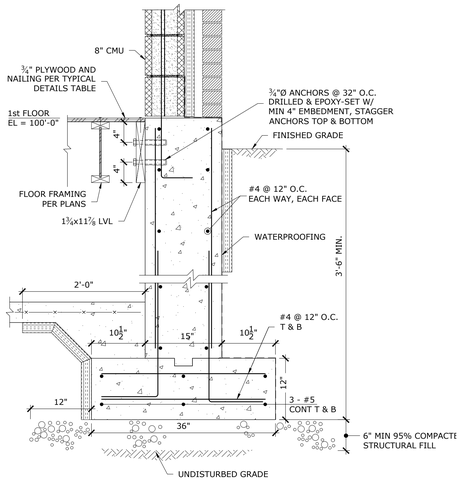

1A S-P2-2.1 FOUNDATION DETAIL AT EXTERIOR WALL
1" = 1'-0"

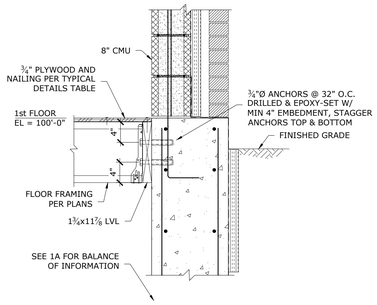

1B S-P2-2.1 FOUNDATION DETAIL AT EXTERIOR WALL
1" = 1'-0"

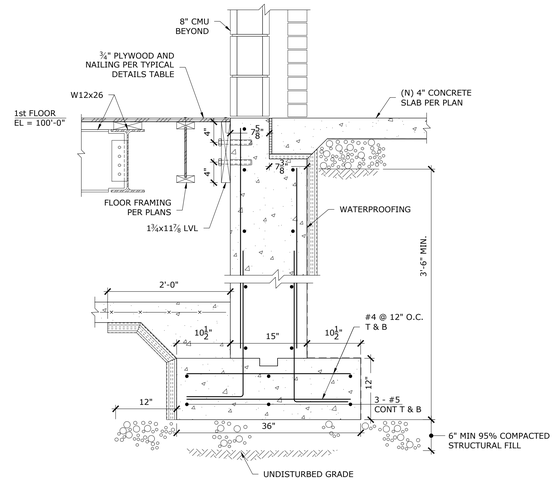

2 S-P2-2.1 FOUNDATION DETAIL AT EXTERIOR WALL
1" = 1'-0"

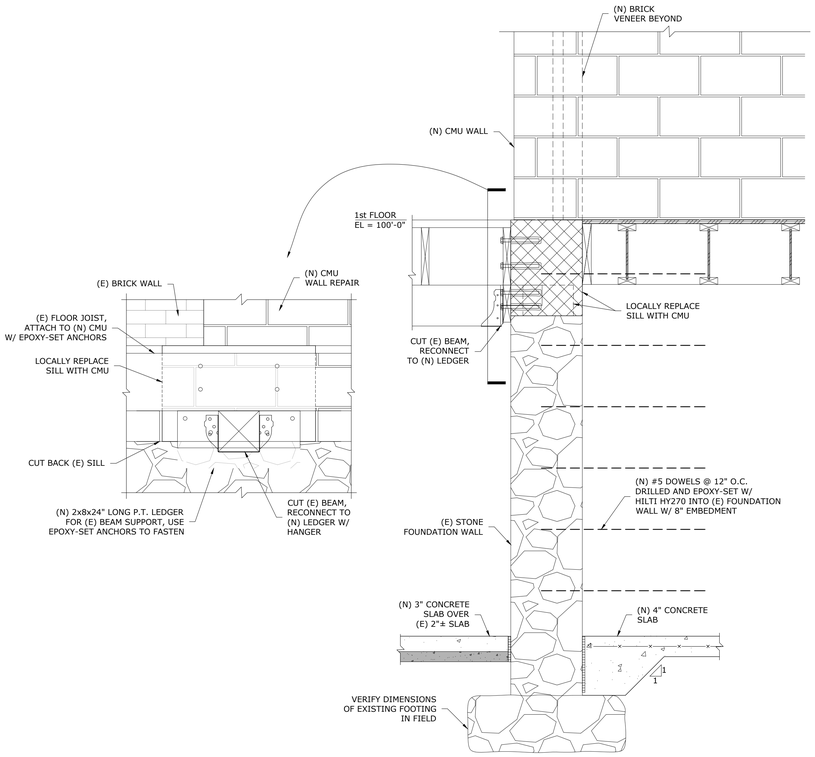

3 S-P2-2.1 FOUNDATION DETAIL AT EXTERIOR WALL REPAIR
1" = 1'-0"

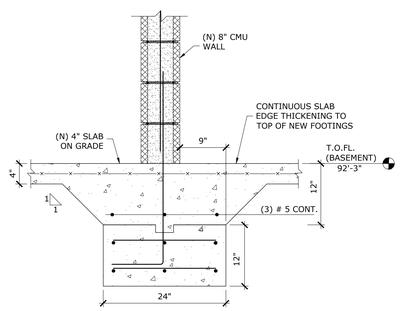

4 S-P2-2.1 WALL FOOTING
1" = 1'-0"

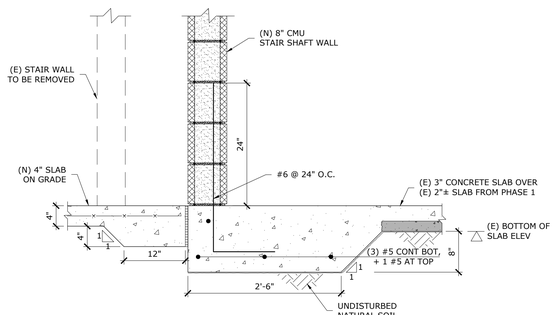

5 S-P2-2.1 SECTION THROUGH FRONT STAIR
1" = 1'-0"

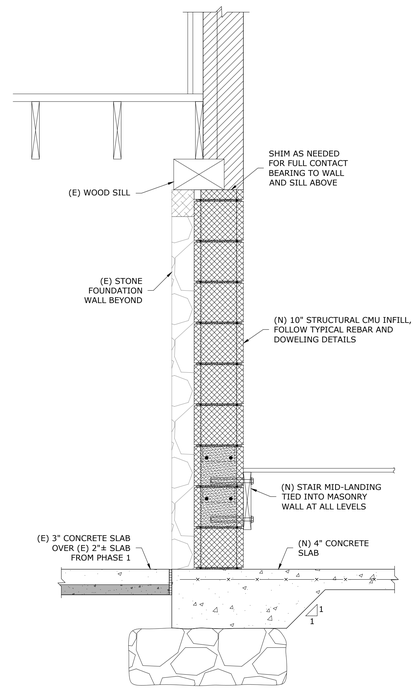

8 S-P2-2.1 FOUNDATION DETAIL AT EXTERIOR WALL REPAIR
1" = 1'-0"

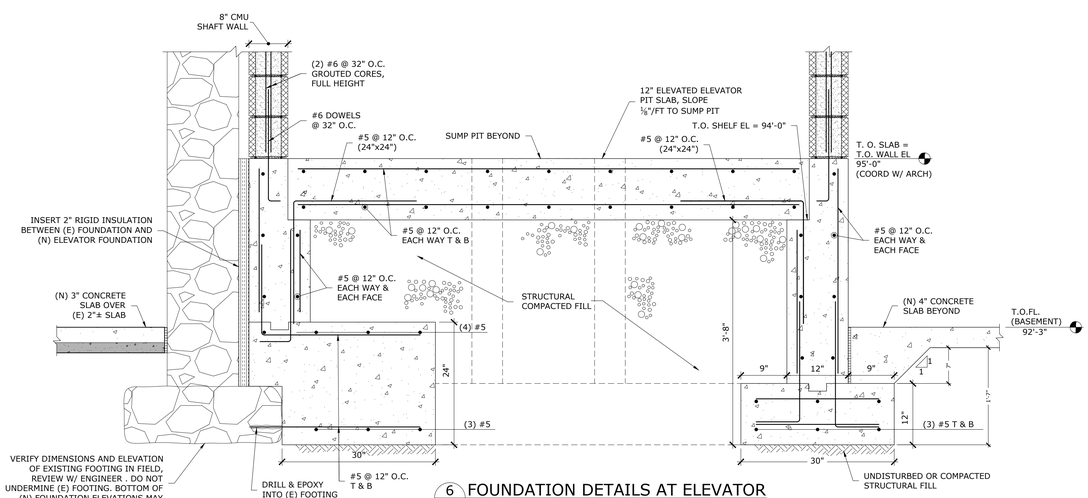

6 S-P2-2.1 FOUNDATION DETAILS AT ELEVATOR
1" = 1'-0"

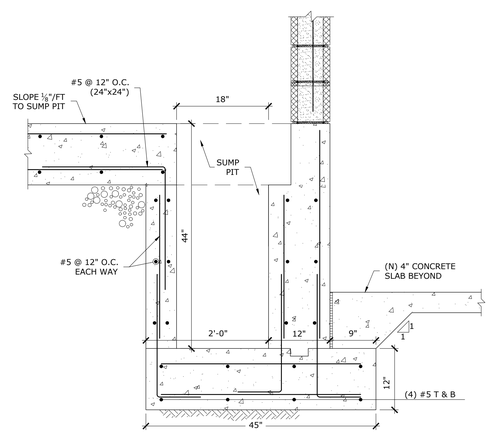

7 S-P2-2.1 DETAIL AT ELEVATOR SUMP PIT
1" = 1'-0"

THE ARCHITECTS
THE INTEGRITY. THE ABILITY. THE EXPERIENCE
THE ARCHITECTS
Robert B. Hurd, AIA
56 Arbor Street
Hartford, CT 06106
Tel: 860-232-2707

Crosskey Architects LLC
Architecture Preservation Interiors
750 Main Street, Hartford, CT 06103
T: (860)724-3000 F: (860)724-3013

CIRRUS STRUCTURAL ENGINEERING
CIRRUS STRUCTURAL ENGINEERING, LLC
19 Lower Woodland Terrace
Columbia, CT 06237
T 860.337.0200 | F 860.471.8138
www.cirrusseng.com

CITIZEN'S BLOCK

28-34 PARK PLACE, VERNON CT

Owner: Town of Vernon - Administration

NOT FOR CONSTRUCTION

Drawn:
Issued: 03-17-21
Status:

Revisions

NO	DATE	DESCRIPTION

S-P2-2.1

FOUNDATION SECTIONS AND DETAILS

Copyright © 2020

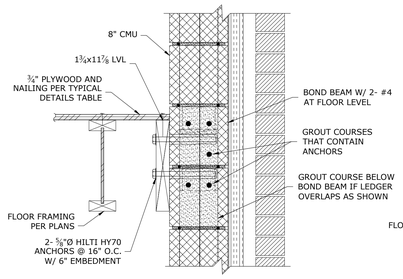

1A S-P2-3.1 SECTION AT EXTERIOR WALL
1½" = 1'-0"

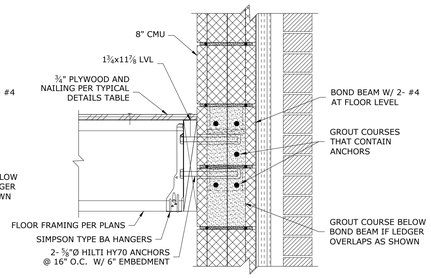

1B S-P2-3.1 SECTION AT EXTERIOR WALL
1½" = 1'-0"

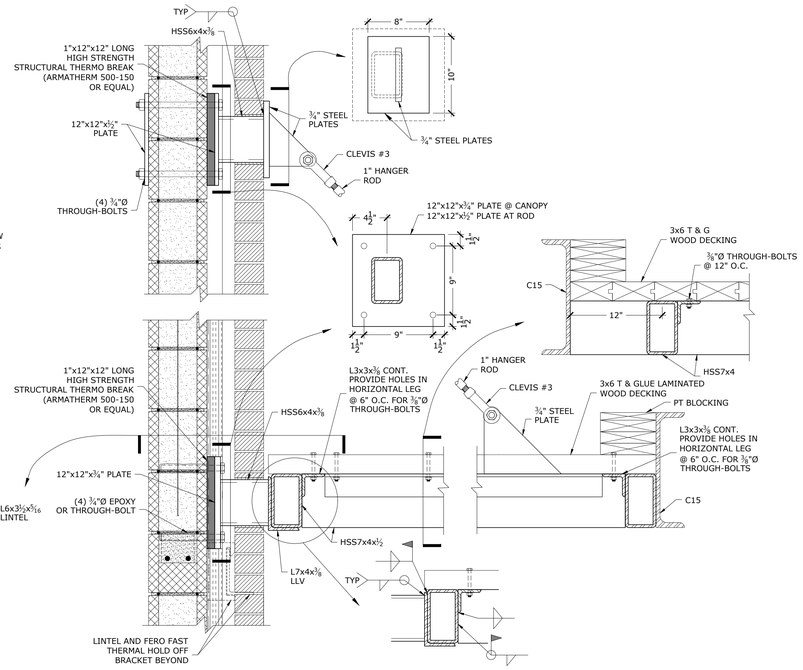

2A S-P2-3.1 SECTION AT CANOPY
1½" = 1'-0" AT SECOND FLOOR FRAMING

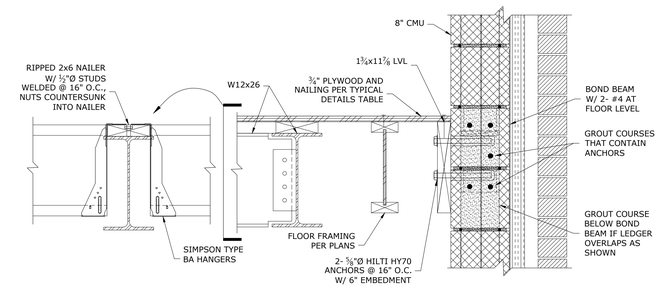

2B S-P2-3.1 SECTION AT EXTERIOR WALL
1½" = 1'-0" AT 3rd FLOOR FRAMING

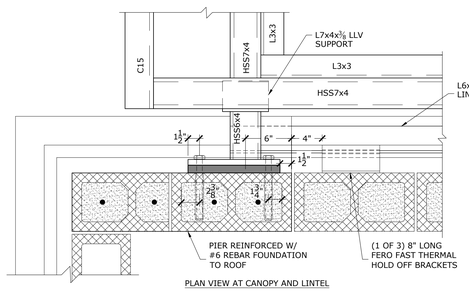

PLAN VIEW AT CANOPY AND LINTEL

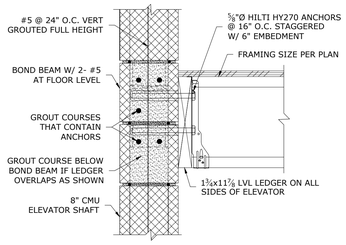

3A S-P2-3.1 FRAMING AT ELEVATOR
1½" = 1'-0"

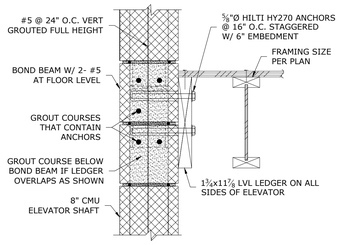

3B S-P2-3.1 FRAMING AT ELEVATOR
1½" = 1'-0"

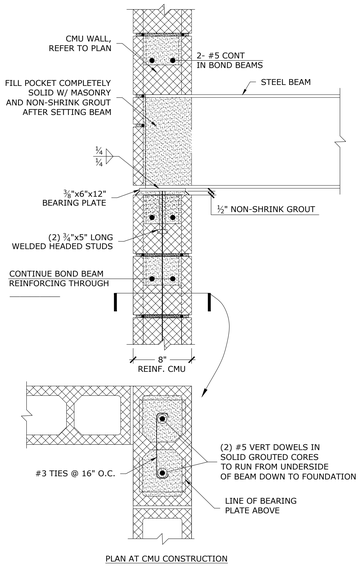

PLAN AT CMU CONSTRUCTION

4 S-P2-3.1 BEAM SUPPORT AT ELEVATOR
1½" = 1'-0"

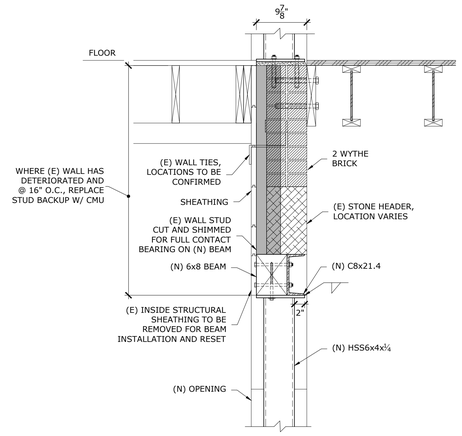

5 S-P2-3.1 SECTION AT COMMON WALL OPENINGS
1" = 1'-0"

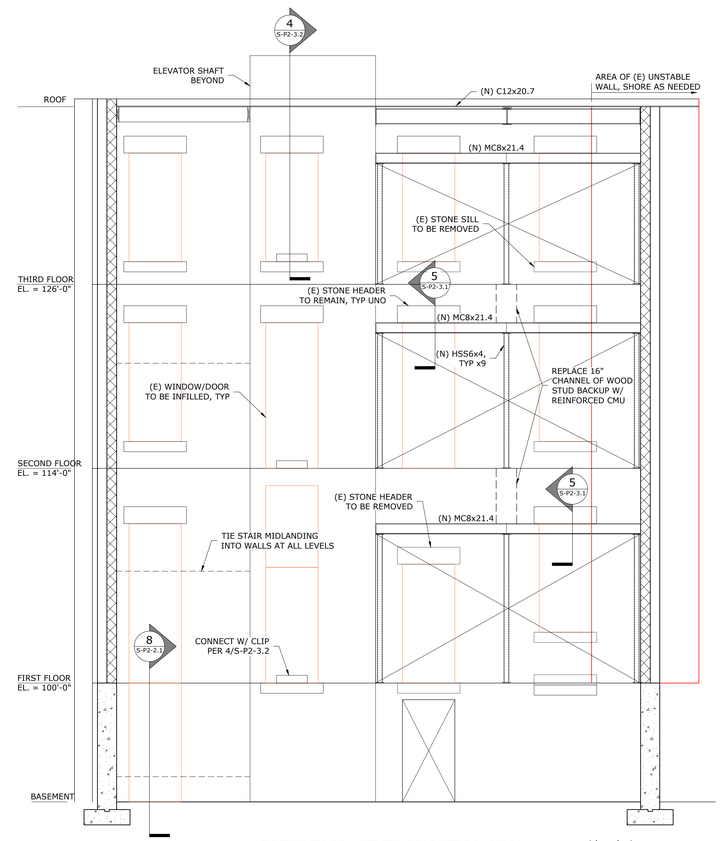

ELEVATION AT TRANSITION WALL
¼" = 1'-0"

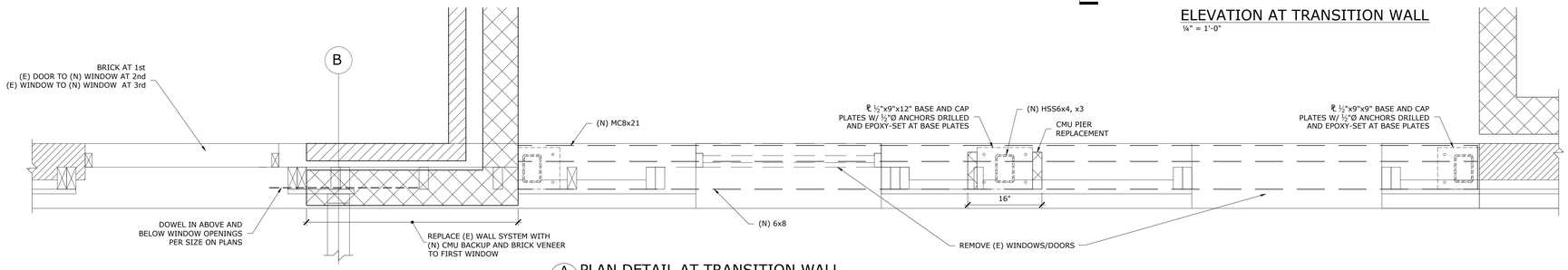

A S-P2-3.1 PLAN DETAIL AT TRANSITION WALL
1" = 1'-0"

THE ARCHITECTS
THE INTEGRITY. THE ABILITY. THE EXPERIENCE
THE ARCHITECTS
Robert B. Hurd, AIA
56 Arbor Street
Hartford, CT 06106
Tel: 860-232-2707

Crosskey Architects LLC
Architecture Preservation Interiors
750 Main Street, Hartford, CT 06103
T: (860)724-3000 F: (860)724-3013

CIRRUS STRUCTURAL ENGINEERING
CIRRUS STRUCTURAL ENGINEERING, LLC
19 Lower Woodland Terrace
Columbia, CT 06237
T 860.337.0200 | F 860.471.8138
www.cirrusseng.com

CITIZEN'S BLOCK

28-34 PARK PLACE, VERNON CT

Owner: Town of Vernon - Administration

NOT FOR CONSTRUCTION

Drawn:
Issued: 03-17-21
Status:

Revisions

NO	DATE	DESCRIPTION

S-P2-3.1
FRAMING SECTIONS AND DETAILS

Copyright © 2020

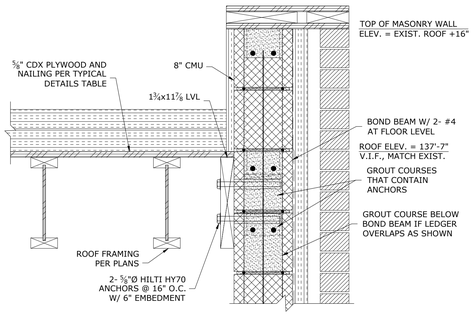

1 S-P2-3.2 TYPICAL SECTION AT PARAPET
1½" = 1'-0"

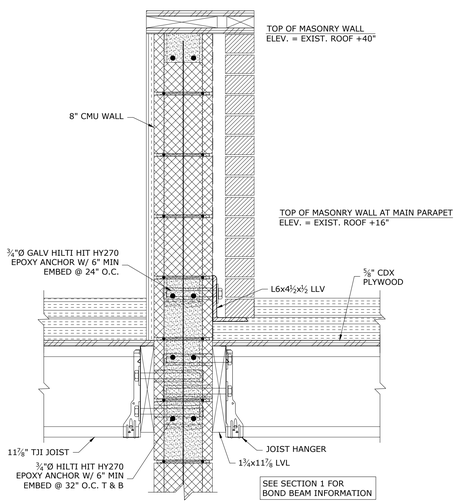

2 S-P2-3.2 SECTION AT WING WALL PARAPET
1½" = 1'-0"

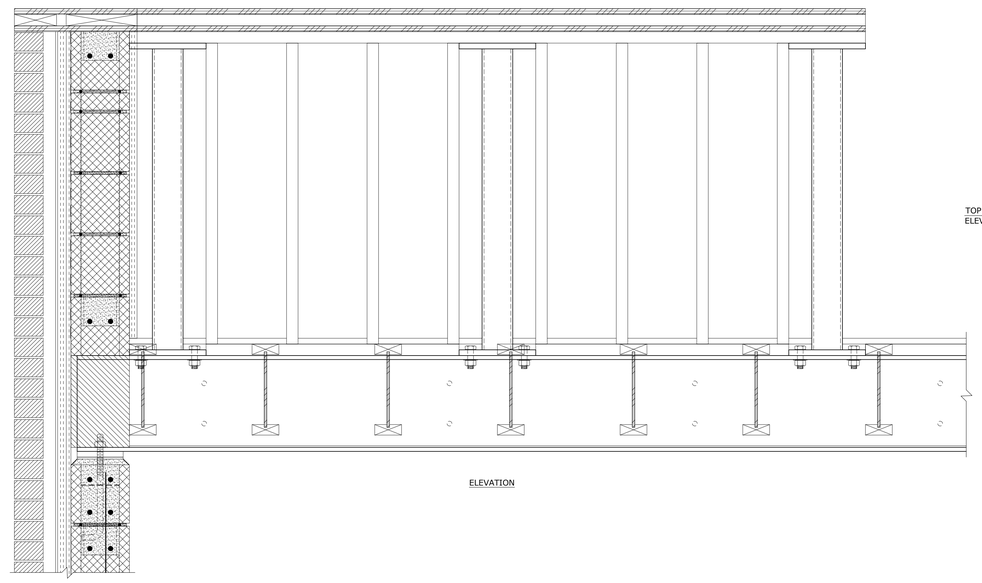

ELEVATION

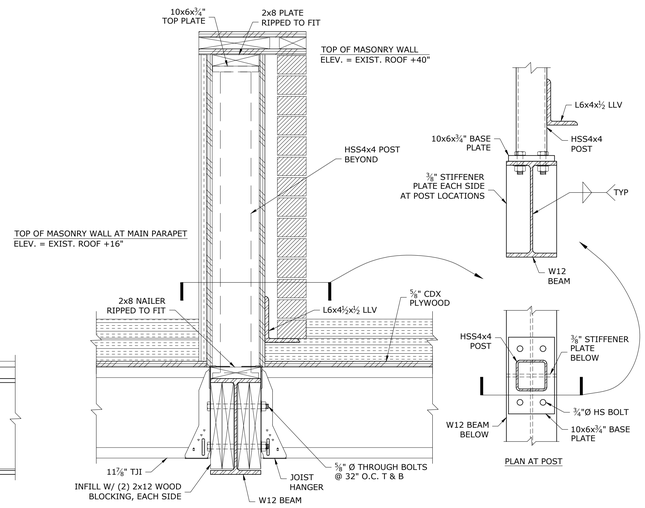

3 S-P2-3.2 SECTION AT WING WALL PARAPET
1½" = 1'-0"

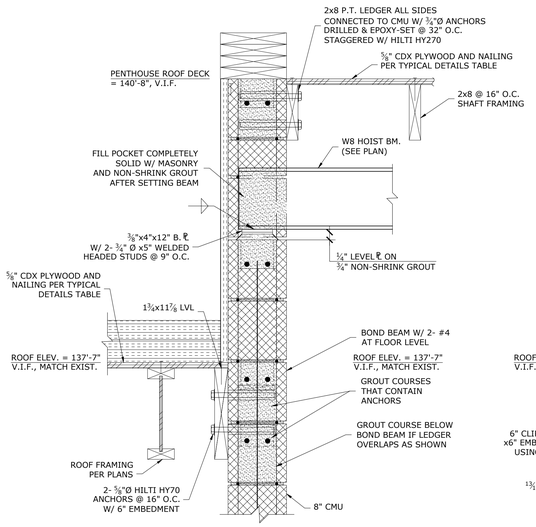

4 S-P2-3.2 SECTION AT ELEVATOR PENTHOUSE ROOF
1½" = 1'-0"

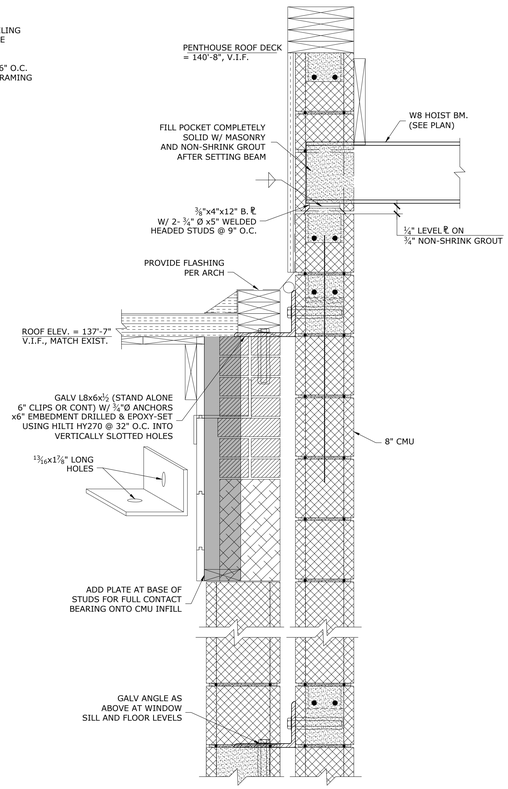

5 S-P2-3.2 SECTION AT ELEVATOR PENTHOUSE ROOF
1½" = 1'-0"

THE ARCHITECTS
The Integrity. The Ability. The Experience.
THE ARCHITECTS
Robert B. Hurd, AIA
56 Arbor Street
Hartford, CT 06106
Tel: 860-232-2707

Crosskey Architects LLC
Architecture Preservation Interiors
750 Main Street, Hartford, CT 06103
T: (860)724-3000 F: (860)724-3013

CIRRUS STRUCTURAL ENGINEERING
CIRRUS STRUCTURAL ENGINEERING, LLC
19 Lower Woodland Terrace
Columbia, CT 06237
T 860.337.0200 | F 860.471.8138
www.cirrusseng.com

CITIZEN'S BLOCK

28-34 PARK PLACE, VERNON CT

Owner: Town of Vernon - Administration

NOT FOR CONSTRUCTION

Drawn:
Issued: 03-17-21
Status:

Revisions

NO	DATE	DESCRIPTION

S-P2-3.2
FRAMING SECTIONS AND DETAILS

Copyright © 2020

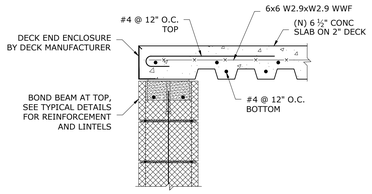

1 S-P2-3.3 SECTION THROUGH EDGE OF VAULT SLAB
1" = 1'-0"

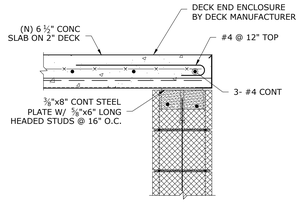

2 S-P2-3.3 SECTION THROUGH EDGE OF VAULT SLAB
1" = 1'-0"

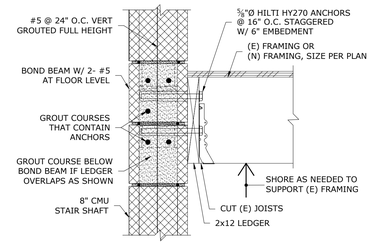

3A S-P2-3.3 FRAMING AT STAIR SHAFT
1½" = 1'-0"

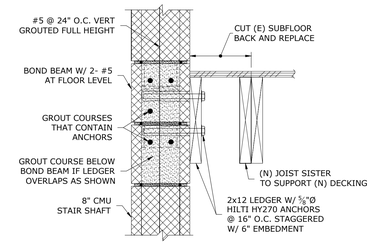

3B S-P2-3.3 FRAMING AT STAIR SHAFT
1½" = 1'-0"

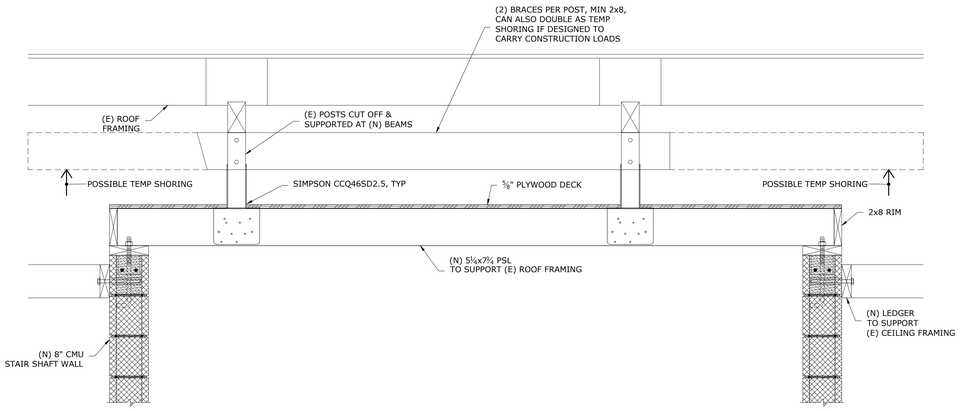

4 S-P2-3.3 SECTION AT STAIR 2
1" = 1'-0"

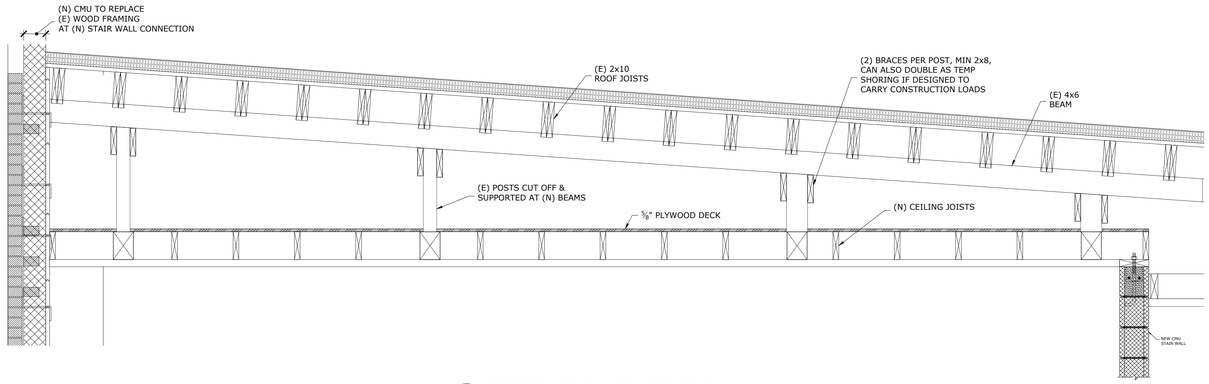

5 S-P2-3.3 SECTION THROUGH STAIR 2
¾" = 1'-0"

THE ARCHITECTS
THE INTEGRITY. THE ABILITY. THE EXPERIENCE
THE ARCHITECTS
Robert B. Hurd, AIA
56 Arbor Street
Hartford, CT 06106
Tel: 860-232-2707

Crosskey Architects LLC
Architecture Preservation Interiors
750 Main Street, Hartford, CT 06103
T: (860)724-3000 F: (860)724-3013

CIRRUS STRUCTURAL ENGINEERING
CIRRUS STRUCTURAL ENGINEERING, LLC
19 Lower Woodland Terrace
Columbia, CT 06237
T 860.337.0200 | F 860.471.8138
www.cirrusseng.com

CITIZEN'S BLOCK

28-34 PARK PLACE, VERNON CT

Owner: Town of Vernon - Administration

NOT FOR CONSTRUCTION

Drawn:
Issued: 03-17-21
Status:

Revisions

NO	DATE	DESCRIPTION

S-P2-3.3
FRAMING
SECTIONS AND DETAILS

Copyright © 2020

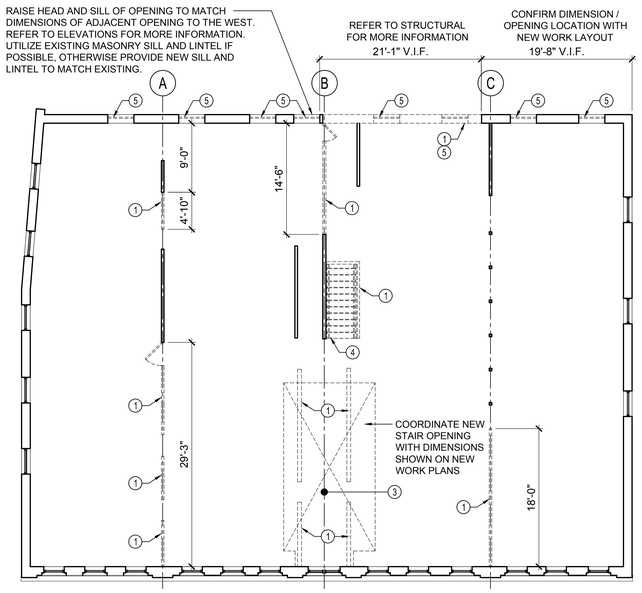

3 THIRD FLOOR DEMOLITION PLAN
SCALE: 1/8"=1'-0"

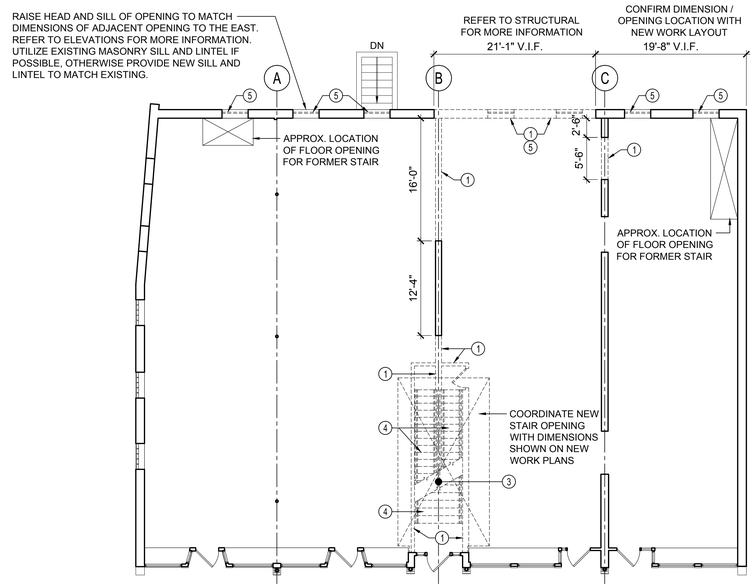

1 FIRST FLOOR DEMOLITION PLAN
SCALE: 1/8"=1'-0"

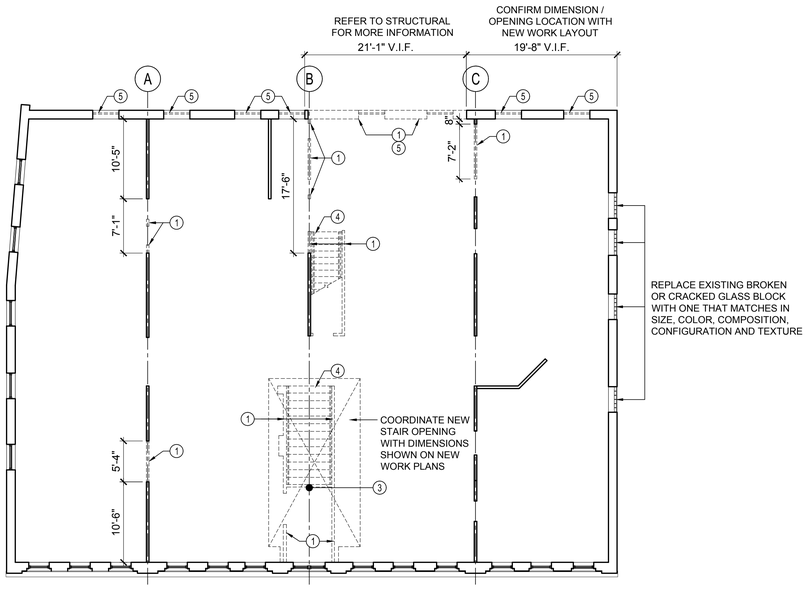

2 SECOND FLOOR DEMOLITION PLAN
SCALE: 1/8"=1'-0"

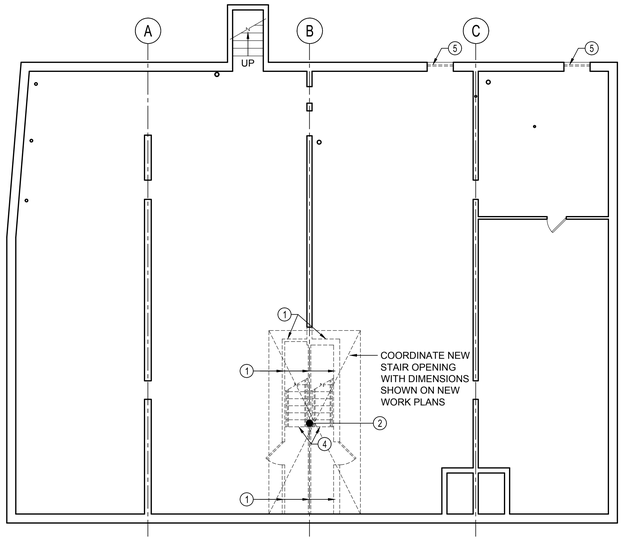

0 BASEMENT FLOOR DEMOLITION PLAN
SCALE: 1/8"=1'-0"

GENERAL DEMOLITION NOTES

1. EXISTING CONSTRUCTION SHOWN REPRESENTS OBSERVABLE CONDITIONS AT TIME OF FIELD SURVEY. CONTRACTOR SHALL FIELD VERIFY ALL DIMENSIONS AND EXISTING CONDITIONS PRIOR TO COMMENCEMENT OF WORK. NOTIFY THE ARCHITECT OF DISCREPANCIES, IF ANY.
2. THESE DEMOLITION DRAWINGS ARE INTENDED TO PROVIDE A SCHEMATIC REPRESENTATION OF DEMOLITION WORK TO BE PERFORMED. INFORMATION SHOWN ON THESE DIAGRAMS SHALL NOT LIMIT THE SCOPE OF DEMOLITION WORK. CONTRACTOR SHALL BE RESPONSIBLE FOR PROVIDING ALL NECESSARY DEMOLITION AS REQUIRED TO COMPLETE THE COMPLETE SCOPE OF WORK AS INDICATED BY THE CONTRACT DOCUMENTS. COORDINATE ALL DEMOLITION WORK WITH PROPOSED NEW WORK.
3. PROVIDE TEMPORARY SHORING AS REQUIRED TO ASSURE THE SAFETY AND STABILITY OF THE EXISTING STRUCTURE AT ALL TIMES. CONDUCT A SURVEY OF THE EXISTING CONDITIONS TO DETERMINE THE NEED FOR SHORING.
4. ALL COMPONENTS SHOWN AS DASHED SHALL BE REMOVED. COMPONENTS THAT ARE NOT DASHED SHALL REMAIN UNLESS NOTED OTHERWISE.
5. WHEN A WALL IS INDICATED TO BE REMOVED, ALL EXISTING COMPONENTS ASSOCIATED WITH THE WALL SHALL ALSO BE REMOVED.
6. WHEN REMOVING EXISTING COMPONENTS, CARE MUST BE TAKEN TO ENSURE ADJACENT SURFACES TO REMAIN ARE NOT DAMAGED. PATCH AND REPAIR ANY DAMAGE THAT MAY OCCUR.
7. LEGALLY DISPOSE OF ALL CONSTRUCTION DEBRIS OFF SITE IN ACCORDANCE WITH ALL STATE AND LOCAL ORDINANCES.
8. THE BUILDING HAS PREVIOUSLY UNDERGONE ENVIRONMENTAL ABATEMENT. CONTRACTOR TO NOTIFY OWNER OF ANY SUSPECTED ENVIRONMENTAL HAZARDS THAT REMAIN.
9. REFER TO CIVIL, STRUCTURAL, MECHANICAL, PLUMBING AND ELECTRICAL DRAWINGS FOR ADDITIONAL INFORMATION.

PREPARATION

SITE ACCESS AND TEMPORARY CONTROLS: CONDUCT SELECTIVE DEMOLITION AND DEBRIS REMOVAL OPERATIONS TO ENSURE MINIMUM INTERFERENCE WITH ADJACENT OCCUPIED AND USED FACILITIES.

TEMPORARY ENCLOSURES: PROVIDE TEMPORARY ENCLOSURES FOR PROTECTION OF EXISTING BUILDING AND CONSTRUCTION, IN PROGRESS AND COMPLETED, FROM EXPOSURE, FOUL WEATHER, OTHER CONSTRUCTION OPERATIONS, AND SIMILAR ACTIVITIES.

POLLUTION CONTROL

DISPOSAL: REMOVE AND TRANSPORT DEBRIS IN A MANNER THAT WILL PREVENT SPILLAGE ON ADJACENT SURFACES AND AREAS. REMOVE DEBRIS FROM ELEVATED PORTIONS OF BUILDING BY CHUTE, HOIST, OR OTHER DEVICE THAT WILL CONVEY DEBRIS TO GRADE LEVEL IN A CONTROLLED DESCENT.

CLEANING: CLEAN ADJACENT AREAS, STRUCTURES, AND IMPROVEMENTS OF DUST, DIRT, AND DEBRIS CAUSED BY DEMOLITION OPERATIONS. RETURN AREAS TO CONDITION EXISTING BEFORE DEMOLITION OPERATIONS BEGAN.

SELECTIVE DEMOLITION

GENERAL: DEMOLISH AND REMOVE EXISTING CONSTRUCTION ONLY TO THE EXTENT REQUIRED BY NEW CONSTRUCTION AND AS INDICATED. USE METHODS REQUIRED TO COMPLETE THE WORK WITHIN LIMITATIONS OF GOVERNING REGULATIONS.

NEATLY CUT OPENINGS AND HOLES PLUMB, SQUARE, AND TRUE TO THE DIMENSIONS REQUIRED. USE CUTTING METHODS LEAST LIKELY TO DAMAGE CONSTRUCTION TO REMAIN OR ADJOINING CONSTRUCTION.

DISPOSAL OF MATERIALS

PROMPTLY DISPOSE OF DEMOLISHED MATERIALS. LOCATE DEMOLITION EQUIPMENT AND REMOVE DEBRIS AND MATERIALS AS TO NOT IMPOSE EXCESSIVE LOADS ON SUPPORTING STRUCTURE. DO NOT ALLOW DEMOLISHED MATERIALS TO ACCUMULATE ON SITE.

PLAN LEGEND

- - - - - - INDICATES COMPONENTS TO BE DEMOLISHED

——— INDICATES COMPONENTS TO REMAIN

DEMOLITION PLAN KEYNOTES

1. REMOVE AND DISPOSE OF EXISTING WALL TO THE EXTENTS INDICATED. IF REQUIRED, PROVIDE SHORING OF SUPPORTED STRUCTURE ABOVE. REFER TO STRUCTURAL DRAWINGS FOR PERMANENT SUPPORT DETAILS. COORDINATE DEMOTION WITH NEW WORK DRAWINGS.
2. REMOVE AND DISPOSE OF EXISTING SLAB ON GRADE TO THE EXTENTS INDICATED ON PLAN. INFILL WITH NEW SLAB ON GRADE PER STRUCTURAL DRAWINGS.
3. REMOVE AND DISPOSE OF EXISTING FLOOR ASSEMBLY TO THE EXTENTS INDICATED. IF REQUIRED, PROVIDE SHORING OF ADJACENT STRUCTURE. REFER TO STRUCTURAL DRAWINGS FOR PERMANENT SUPPORT DETAILS. COORDINATE DEMOTION WITH NEW WORK DRAWINGS.
4. REMOVE AND DISPOSE OF EXISTING STAIR AND ALL ASSOCIATED STAIR COMPONENTS IN ITS ENTIRETY.
5. REMOVE AND DISPOSE OF EXISTING EXTERIOR DOOR OR WINDOW TEMPORARY INFILL. COORDINATE DEMOLITION WITH NEW WORK TO MAINTAIN WEATHER TIGHT ENCLOSURE UNTIL TIME OF NEW INFILL, WINDOW, OR DOOR INSTALLATION.
6. REMOVE AND DISPOSE OF EXISTING WINDOW. PREPARE OPENING FOR NEW WINDOW INSTALLATION. COORDINATE DEMOLITION WITH NEW WORK TO MAINTAIN WEATHER TIGHT ENCLOSURE UNTIL TIME OF NEW WINDOW INSTALLATION.

THE ARCHITECTS
THE INTEGRITY, THE ABILITY, THE EXPERIENCE
THE ARCHITECTS
Robert B. Hunt, AIA
56 Arbor Street
Hartford, CT 06106
Tel: 860-232-2707

Crosskey Architects LLC
Architecture Preservation Interiors
750 Main Street, Hartford, CT 06103
T: (860)724-3000 F: (860)724-3013

CITIZEN'S BLOCK
28-34 PARK PLACE, VERNON CT
14 Park Place, Vernon CT 06066
Owner: Town of Vernon - Administration

NOT FOR CONSTRUCTION RELEASED FOR: BID

Drawn: PS
Issued: 03.17.2021
Status:

Revisions

NO	DATE	DESCRIPTION

AD-100
DEMOLITION FLOOR PLANS

Copyright © 2020

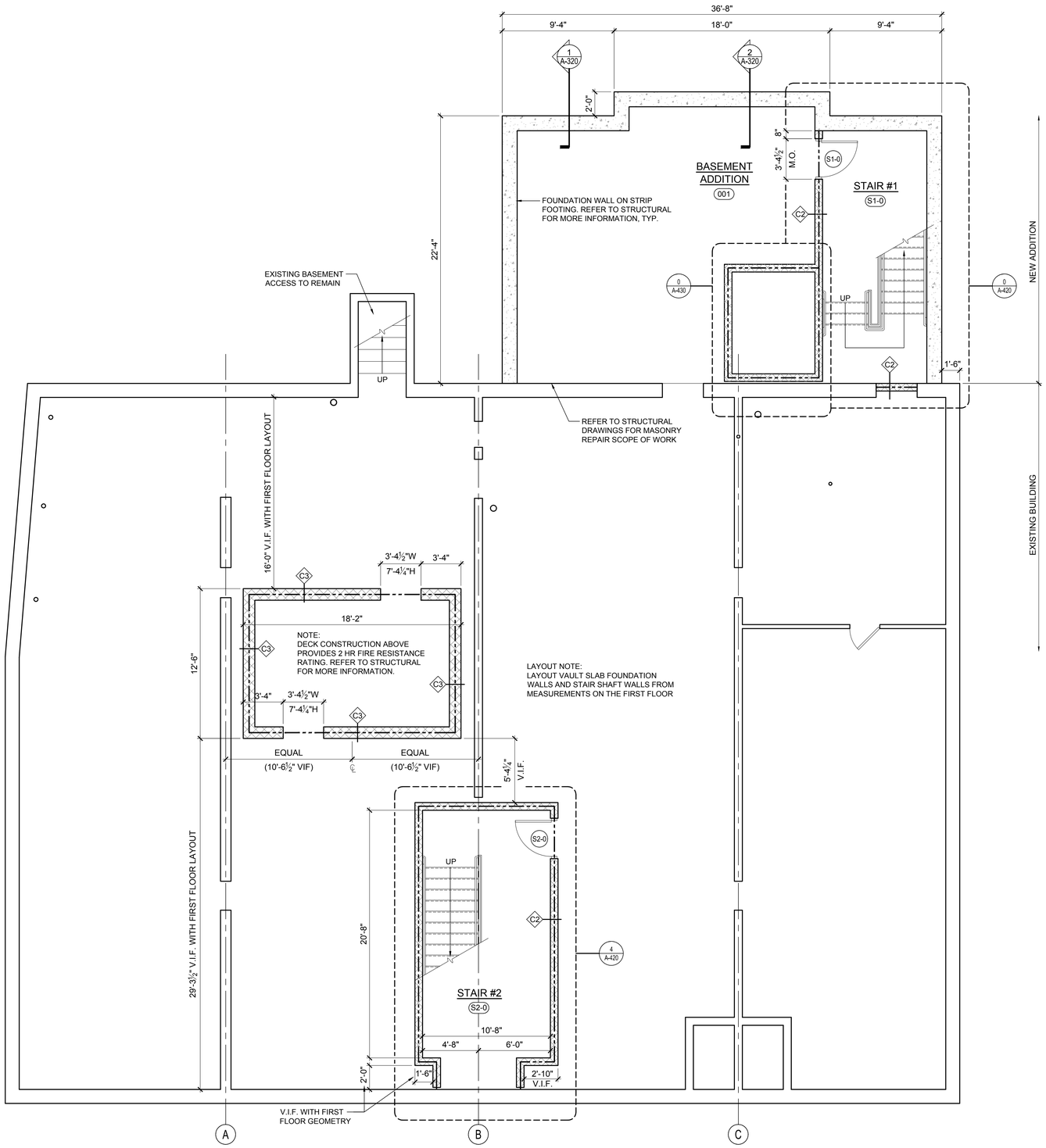

1 BASEMENT FLOOR PLAN
SCALE: 1/4"=1'-0"

NORTH

GENERAL NOTES

1. ALL MATERIALS ARE TO BE NEW UNLESS NOTED OTHERWISE.
2. IF PLANS AND SPECIFICATIONS PROVIDE CONFLICTING INFORMATION, THEN THE STRICTEST, MOST EXPENSIVE INTERPRETATION SHALL APPLY.
3. ALL INTERIOR DIMENSIONS SHOWN FOR EXISTING CONSTRUCTION IS TO THE FACE OF FINISHED SURFACE. INTERIOR DIMENSIONS FOR NEW WORK SHOWN ARE GIVEN FROM FACE OF STUD FOR STUD WALLS, FACE OF MASONRY FOR MASONRY WALLS, OR CENTERLINE OF BEAMS/ COLUMNS (UNO).
4. EXISTING CONSTRUCTION SHOWN REPRESENTS OBSERVABLE CONDITIONS AT TIME OF FIELD SURVEY. CONTRACTOR SHALL FIELD VERIFY ALL DIMENSIONS AND EXISTING CONDITIONS PRIOR TO COMMENCEMENT OF WORK. NOTIFY THE ARCHITECT OF DISCREPANCIES, IF ANY.
5. DRAWINGS MAY NOT DETAIL EVERY EXISTING CONDITION OR INTERSECTION OF EXISTING TO NEW WORK. WHERE A DETAIL IS DEVELOPED AND REFERENCED FOR A SPECIFIC CONDITION, SAME OR SIMILAR DETAIL SHALL APPLY TO IDENTICAL OR SIMILAR CONDITIONS ELSEWHERE IN THE PROJECT.
6. CONTRACTOR TO EVALUATE EXTERIOR MASONRY ON NORTH SIDE OF BUILDING FOR AREAS REQUIRING MORTAR REPOINTING. MORTAR REPOINTING SHALL BE LIMITED TO AREAS OF THE EXISTING FACADE THAT WILL REMAIN EXPOSED TO THE WEATHER AFTER THE NEW ADDITION IS CONSTRUCTED. ASSUME 50% REPOINTING. (ASSUMED AREA OF REPOINTING = 750 SF)
7. REPAIR/ INFILL/ PATCH ALL ABANDONED PENETRATIONS OR MISSING CONSTRUCTION ON EXTERIOR WALLS. REPAIR/ INFILL CONSTRUCTION TO MATCH ADJACENT EXISTING CONSTRUCTION.
8. REFER TO CODE DRAWINGS FOR LOCATIONS OF RATED ASSEMBLIES. SEAL ALL PENETRATIONS IN RATED ASSEMBLIES WITH UL LABELED FIRESTOPPING MATERIALS.
9. ALL LUMBER IN CONTACT WITH CONCRETE OR MASONRY, OR UTILIZED IN ROOFING APPLICATIONS SHALL BE PRESSURE TREATED.
10. REFER TO CIVIL AND STRUCTURAL DRAWINGS FOR ADDITIONAL INFORMATION.

PLAN LEGEND

- EXISTING CONSTRUCTION
- NEW STUD WALL CONSTRUCTION
- POURED CONCRETE WALL
- NEW CMU WALL/INFILL ASSEMBLY
- NEW BRICK VENEER ON CMU BACKUP WALL
- INDICATES 1 HOUR FIRE RESISTIVE RATED WALL CONSTRUCTION
- INDICATES 2 HOUR FIRE RESISTIVE RATED WALL CONSTRUCTION

WALL TYPES SCHEDULE

C1 — 8" CLASSIFICATION D-2 CONCRETE MASONRY UNIT BACKUP WALL, REINFORCING PER STRUCTURAL DRAWINGS. AIR & VAPOR BARRIER. 2" POLYISO INSULATION. 1 3/4" AIR SPACE. STANDARD DEPTH BRICK VENEER. REFER TO DETAILS FOR MORE INFORMATION.
2-HR RATED WALL, UL DESIGN #U939.
NFPA 285 COMPLIANT ASSEMBLY.

C2 — 8" CLASSIFICATION D-2 CONCRETE MASONRY UNIT WALL, REINFORCING PER STRUCTURAL DRAWINGS. REFER TO WALL SECTIONS FOR HEIGHT. REFER TO DETAILS FOR MORE INFORMATION.
2-HR RATED WALL, UL DESIGN #U905

C3 — 12" CLASSIFICATION D-2 CONCRETE MASONRY UNIT WALL, REINFORCING PER STRUCTURAL DRAWINGS. REFER TO WALL SECTIONS FOR HEIGHT. REFER TO DETAILS FOR MORE INFORMATION.
2-HR RATED WALL, UL DESIGN #U905

THE ARCHITECTS
THE INTEGRITY, THE ABILITY, THE EXPERIENCE
THE ARCHITECTS
Robert B. Hurd, AIA
56 Arbor Street
Hartford, CT 06106
Tel: 860-232-2707

Crosskey Architects LLC
Architecture Preservation Interiors
750 Main Street, Hartford, CT 06103
T: (860)724-3000 F: (860)724-3013

CITIZEN'S BLOCK
28-34 PARK PLACE, VERNON CT
Owner: Town of Vernon - Administration
14 Park Place, Vernon CT 06066

NOT FOR CONSTRUCTION RELEASED FOR: BID

Drawn: PS
Issued: 03.17.2021
Status:

Revisions

NO	DATE	DESCRIPTION

A-100
BASEMENT FLOOR PLAN

Copyright © 2020

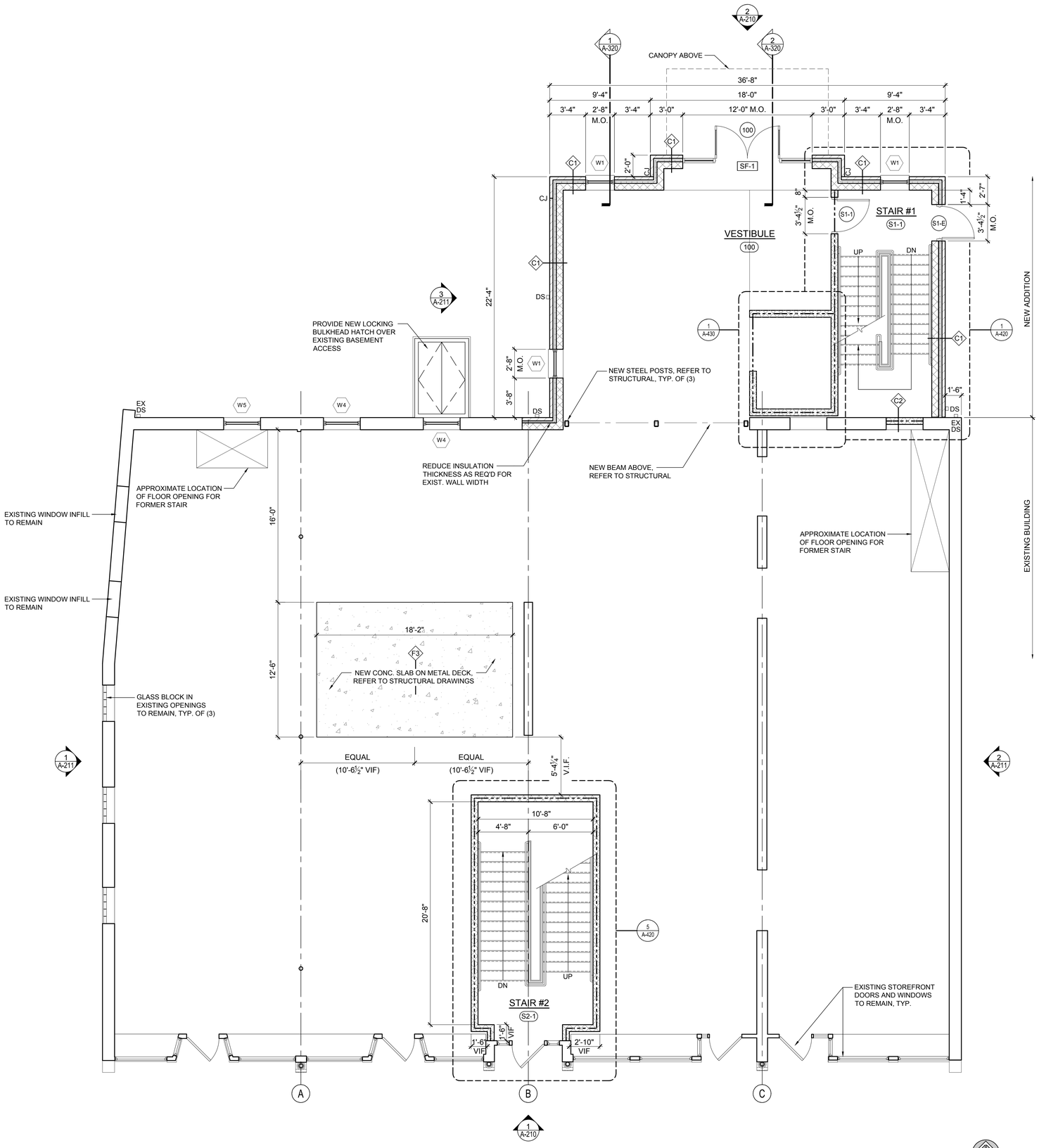

1 FIRST FLOOR PLAN
SCALE: 1/4"=1'-0"

GENERAL NOTES

1. ALL MATERIALS ARE TO BE NEW UNLESS NOTED OTHERWISE.
2. IF PLANS AND SPECIFICATIONS PROVIDE CONFLICTING INFORMATION, THEN THE STRICTEST, MOST EXPENSIVE INTERPRETATION SHALL APPLY.
3. ALL INTERIOR DIMENSIONS SHOWN FOR EXISTING CONSTRUCTION IS TO THE FACE OF FINISHED SURFACE. INTERIOR DIMENSIONS FOR NEW WORK SHOWN ARE GIVEN FROM FACE OF STUD FOR STUD WALLS, FACE OF MASONRY FOR MASONRY WALLS, OR CENTERLINE OF BEAMS/ COLUMNS (UNO).
4. EXISTING CONSTRUCTION SHOWN REPRESENTS OBSERVABLE CONDITIONS AT TIME OF FIELD SURVEY. CONTRACTOR SHALL FIELD VERIFY ALL DIMENSIONS AND EXISTING CONDITIONS PRIOR TO COMMENCEMENT OF WORK. NOTIFY THE ARCHITECT OF DISCREPANCIES, IF ANY.
5. DRAWINGS MAY NOT DETAIL EVERY EXISTING CONDITION OR INTERSECTION OF EXISTING TO NEW WORK. WHERE A DETAIL IS DEVELOPED AND REFERENCED FOR A SPECIFIC CONDITION, SAME OR SIMILAR DETAIL SHALL APPLY TO IDENTICAL OR SIMILAR CONDITIONS ELSEWHERE IN THE PROJECT.
6. CONTRACTOR TO EVALUATE EXTERIOR MASONRY ON NORTH SIDE OF BUILDING FOR AREAS REQUIRING MORTAR REPOINTING. MORTAR REPOINTING SHALL BE LIMITED TO AREAS OF THE EXISTING FACADE THAT WILL REMAIN EXPOSED TO THE WEATHER AFTER THE NEW ADDITION IS CONSTRUCTED. ASSUME 50% REPOINTING. (ASSUMED AREA OF REPOINTING = 750 SF)
7. REPAIR/ INFILL/ PATCH ALL ABANDONED PENETRATIONS OR MISSING CONSTRUCTION ON EXTERIOR WALLS. REPAIR/ INFILL CONSTRUCTION TO MATCH ADJACENT EXISTING CONSTRUCTION.
8. REFER TO CODE DRAWINGS FOR LOCATIONS OF RATED ASSEMBLIES. SEAL ALL PENETRATIONS IN RATED ASSEMBLIES WITH UL LABELED FIRESTOPPING MATERIALS.
9. ALL LUMBER IN CONTACT WITH CONCRETE OR MASONRY, OR UTILIZED IN ROOFING APPLICATIONS SHALL BE PRESSURE TREATED.
10. REFER TO CIVIL AND STRUCTURAL DRAWINGS FOR ADDITIONAL INFORMATION.

PLAN LEGEND

- EXISTING CONSTRUCTION
- NEW STUD WALL CONSTRUCTION
- POURED CONCRETE WALL
- NEW CMU WALL/INFILL ASSEMBLY
- NEW BRICK VENEER ON CMU BACKUP WALL
- INDICATES 1 HOUR FIRE RESISTIVE RATED WALL CONSTRUCTION
- INDICATES 2 HOUR FIRE RESISTIVE RATED WALL CONSTRUCTION

WALL TYPES SCHEDULE

C1	8" CLASSIFICATION D-2 CONCRETE MASONRY UNIT BACKUP WALL, REINFORCING PER STRUCTURAL DRAWINGS. AIR & VAPOR BARRIER. 2" POLYISO INSULATION. 1 3/4" AIR SPACE. STANDARD DEPTH BRICK VENEER. REFER TO DETAILS FOR MORE INFORMATION. 2-HR RATED WALL, UL DESIGN #U939. NFPA 285 COMPLIANT ASSEMBLY.
C2	8" CLASSIFICATION D-2 CONCRETE MASONRY UNIT WALL, REINFORCING PER STRUCTURAL DRAWINGS. REFER TO WALL SECTIONS FOR HEIGHT. REFER TO DETAILS FOR MORE INFORMATION. 2-HR RATED WALL, UL DESIGN #U905
C3	12" CLASSIFICATION D-2 CONCRETE MASONRY UNIT WALL, REINFORCING PER STRUCTURAL DRAWINGS. REFER TO WALL SECTIONS FOR HEIGHT. REFER TO DETAILS FOR MORE INFORMATION. 2-HR RATED WALL, UL DESIGN #U905

THE ARCHITECTS
THE INTEGRITY, THE ABILITY, THE EXPERIENCE
THE ARCHITECTS
Robert B. Hurd, AIA
56 Arbor Street
Hartford, CT 06106
Tel: 860-232-2707

Crosskey Architects LLC
Architecture Preservation Interiors
750 Main Street, Hartford, CT 06103
T: (860)724-3000 F: (860)724-3013

CITIZEN'S BLOCK

28-34 PARK PLACE, VERNON CT

Owner: Town of Vernon - Administration

14 Park Place, Vernon CT 06066

NOT FOR CONSTRUCTION RELEASED FOR: BID

Drawn: PS
Issued: 03.17.2021
Status:

Revisions

NO	DATE	DESCRIPTION

A-110
FIRST FLOOR PLAN

Copyright © 2020

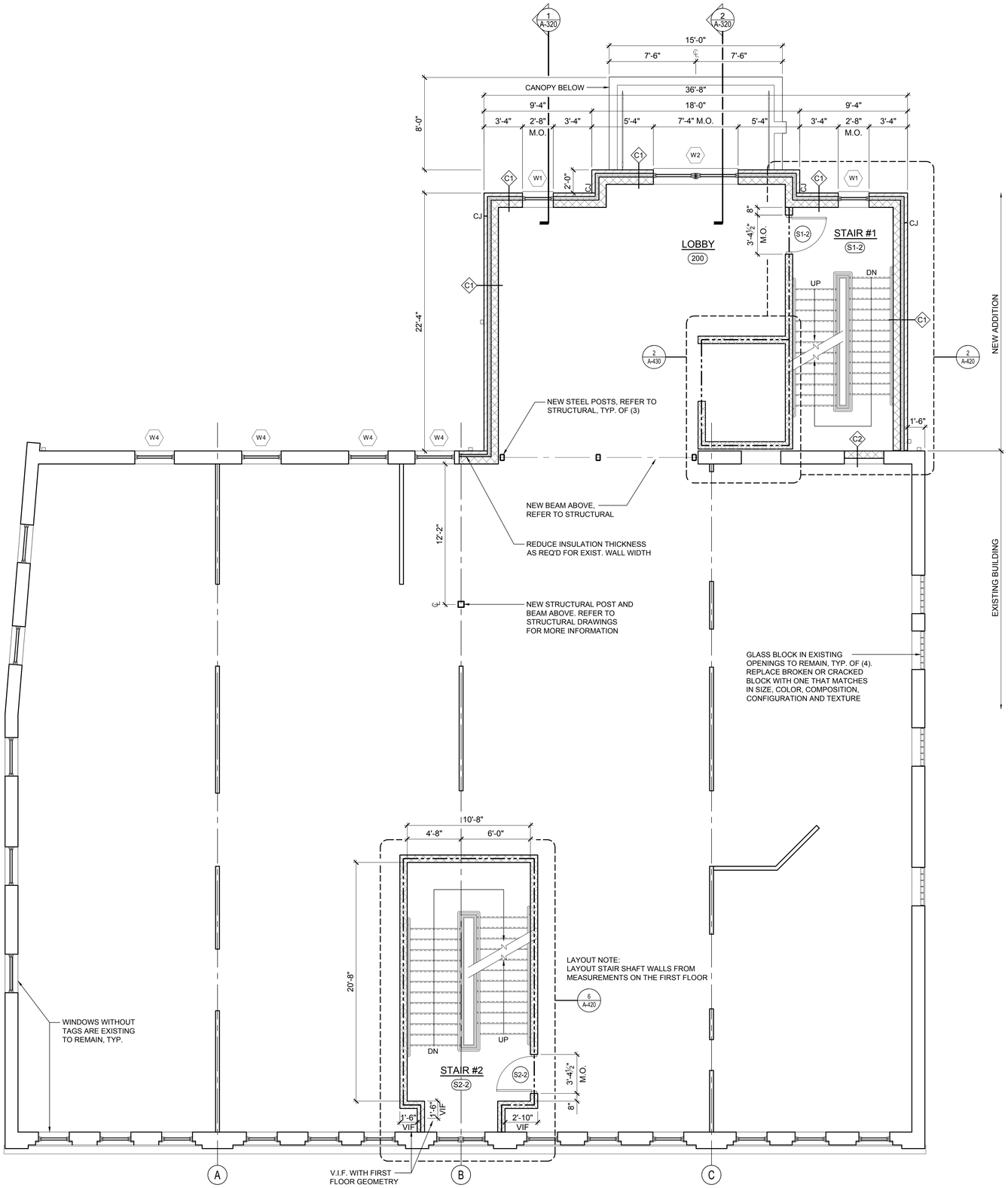

1 SECOND FLOOR PLAN
SCALE: 1/4"=1'-0"

NORTH

GENERAL NOTES

1. ALL MATERIALS ARE TO BE NEW UNLESS NOTED OTHERWISE.
2. IF PLANS AND SPECIFICATIONS PROVIDE CONFLICTING INFORMATION, THEN THE STRICTEST, MOST EXPENSIVE INTERPRETATION SHALL APPLY.
3. ALL INTERIOR DIMENSIONS SHOWN FOR EXISTING CONSTRUCTION IS TO THE FACE OF FINISHED SURFACE. INTERIOR DIMENSIONS FOR NEW WORK SHOWN ARE GIVEN FROM FACE OF STUD FOR STUD WALLS, FACE OF MASONRY FOR MASONRY WALLS, OR CENTERLINE OF BEAMS/ COLUMNS (UNO).
4. EXISTING CONSTRUCTION SHOWN REPRESENTS OBSERVABLE CONDITIONS AT TIME OF FIELD SURVEY. CONTRACTOR SHALL FIELD VERIFY ALL DIMENSIONS AND EXISTING CONDITIONS PRIOR TO COMMENCEMENT OF WORK. NOTIFY THE ARCHITECT OF DISCREPANCIES, IF ANY.
5. DRAWINGS MAY NOT DETAIL EVERY EXISTING CONDITION OR INTERSECTION OF EXISTING TO NEW WORK. WHERE A DETAIL IS DEVELOPED AND REFERENCED FOR A SPECIFIC CONDITION, SAME OR SIMILAR DETAIL SHALL APPLY TO IDENTICAL OR SIMILAR CONDITIONS ELSEWHERE IN THE PROJECT.
6. CONTRACTOR TO EVALUATE EXTERIOR MASONRY ON NORTH SIDE OF BUILDING FOR AREAS REQUIRING MORTAR REPOINTING. MORTAR REPOINTING SHALL BE LIMITED TO AREAS OF THE EXISTING FACADE THAT WILL REMAIN EXPOSED TO THE WEATHER AFTER THE NEW ADDITION IS CONSTRUCTED. ASSUME 50% REPOINTING. (ASSUMED AREA OF REPOINTING = 750 SF)
7. REPAIR/ INFILL/ PATCH ALL ABANDONED PENETRATIONS OR MISSING CONSTRUCTION ON EXTERIOR WALLS. REPAIR/ INFILL CONSTRUCTION TO MATCH ADJACENT EXISTING CONSTRUCTION.
8. REFER TO CODE DRAWINGS FOR LOCATIONS OF RATED ASSEMBLIES. SEAL ALL PENETRATIONS IN RATED ASSEMBLIES WITH UL LABELED FIRESTOPPING MATERIALS.
9. ALL LUMBER IN CONTACT WITH CONCRETE OR MASONRY, OR UTILIZED IN ROOFING APPLICATIONS SHALL BE PRESSURE TREATED.
10. REFER TO CIVIL AND STRUCTURAL DRAWINGS FOR ADDITIONAL INFORMATION.

PLAN LEGEND

- EXISTING CONSTRUCTION
- NEW STUD WALL CONSTRUCTION
- POURED CONCRETE WALL
- NEW CMU WALL/INFILL ASSEMBLY
- NEW BRICK VENEER ON CMU BACKUP WALL
- INDICATES 1 HOUR FIRE RESISTIVE RATED WALL CONSTRUCTION
- INDICATES 2 HOUR FIRE RESISTIVE RATED WALL CONSTRUCTION

WALL TYPES SCHEDULE

C1 — 8" CLASSIFICATION D-2 CONCRETE MASONRY UNIT BACKUP WALL, REINFORCING PER STRUCTURAL DRAWINGS. AIR & VAPOR BARRIER. 2" POLYISO INSULATION. 1 3/4" AIR SPACE. STANDARD DEPTH BRICK VENEER. REFER TO DETAILS FOR MORE INFORMATION.
2-HR RATED WALL, UL DESIGN #U939.
NFPA 285 COMPLIANT ASSEMBLY.

C2 — 8" CLASSIFICATION D-2 CONCRETE MASONRY UNIT WALL, REINFORCING PER STRUCTURAL DRAWINGS. REFER TO WALL SECTIONS FOR HEIGHT. REFER TO DETAILS FOR MORE INFORMATION.
2-HR RATED WALL, UL DESIGN #U905

C3 — 12" CLASSIFICATION D-2 CONCRETE MASONRY UNIT WALL, REINFORCING PER STRUCTURAL DRAWINGS. REFER TO WALL SECTIONS FOR HEIGHT. REFER TO DETAILS FOR MORE INFORMATION.
2-HR RATED WALL, UL DESIGN #U905

THE ARCHITECTS
THE INTEGRITY, THE ABILITY, THE EXPERIENCE
THE ARCHITECTS
Robert B. Hunt, AIA
56 Arbor Street
Hartford, CT 06106
Tel: 860-232-2707

Crosskey Architects LLC
Architecture Preservation Interiors
750 Main Street, Hartford, CT 06103
T: (860)724-3000 F: (860)724-3013

CITIZEN'S BLOCK

28-34 PARK PLACE, VERNON CT

Owner: Town of Vernon - Administration

14 Park Place, Vernon CT 06066

NOT FOR CONSTRUCTION RELEASED FOR: BID

Drawn: PS
Issued: 03.17.2021
Status:

Revisions

NO	DATE	DESCRIPTION

A-120
SECOND FLOOR PLAN

Copyright © 2020

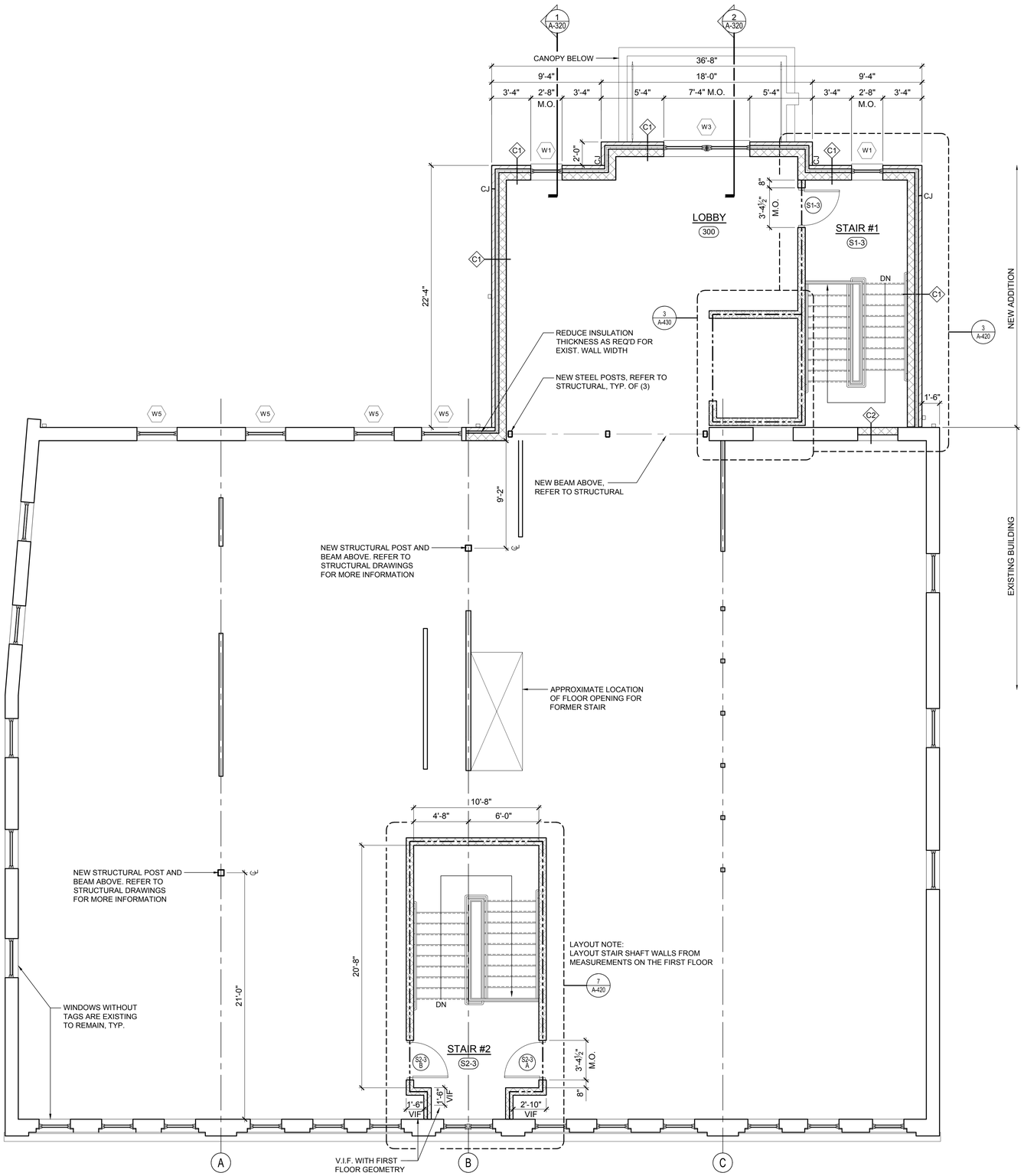

1 THIRD FLOOR PLAN
SCALE: 1/4"=1'-0"

NORTH

GENERAL NOTES

1. ALL MATERIALS ARE TO BE NEW UNLESS NOTED OTHERWISE.
2. IF PLANS AND SPECIFICATIONS PROVIDE CONFLICTING INFORMATION, THEN THE STRICTEST, MOST EXPENSIVE INTERPRETATION SHALL APPLY.
3. ALL INTERIOR DIMENSIONS SHOWN FOR EXISTING CONSTRUCTION IS TO THE FACE OF FINISHED SURFACE. INTERIOR DIMENSIONS FOR NEW WORK SHOWN ARE GIVEN FROM FACE OF STUD FOR STUD WALLS, FACE OF MASONRY FOR MASONRY WALLS, OR CENTERLINE OF BEAMS/ COLUMNS (UNO).
4. EXISTING CONSTRUCTION SHOWN REPRESENTS OBSERVABLE CONDITIONS AT TIME OF FIELD SURVEY. CONTRACTOR SHALL FIELD VERIFY ALL DIMENSIONS AND EXISTING CONDITIONS PRIOR TO COMMENCEMENT OF WORK. NOTIFY THE ARCHITECT OF DISCREPANCIES, IF ANY.
5. DRAWINGS MAY NOT DETAIL EVERY EXISTING CONDITION OR INTERSECTION OF EXISTING TO NEW WORK. WHERE A DETAIL IS DEVELOPED AND REFERENCED FOR A SPECIFIC CONDITION, SAME OR SIMILAR DETAIL SHALL APPLY TO IDENTICAL OR SIMILAR CONDITIONS ELSEWHERE IN THE PROJECT.
6. CONTRACTOR TO EVALUATE EXTERIOR MASONRY ON NORTH SIDE OF BUILDING FOR AREAS REQUIRING MORTAR REPOINTING. MORTAR REPOINTING SHALL BE LIMITED TO AREAS OF THE EXISTING FACADE THAT WILL REMAIN EXPOSED TO THE WEATHER AFTER THE NEW ADDITION IS CONSTRUCTED. ASSUME 50% REPOINTING. (ASSUMED AREA OF REPOINTING = 750 SF)
7. REPAIR/ INFILL/ PATCH ALL ABANDONED PENETRATIONS OR MISSING CONSTRUCTION ON EXTERIOR WALLS. REPAIR/ INFILL CONSTRUCTION TO MATCH ADJACENT EXISTING CONSTRUCTION.
8. REFER TO CODE DRAWINGS FOR LOCATIONS OF RATED ASSEMBLIES. SEAL ALL PENETRATIONS IN RATED ASSEMBLIES WITH UL LABELED FIRESTOPPING MATERIALS.
9. ALL LUMBER IN CONTACT WITH CONCRETE OR MASONRY, OR UTILIZED IN ROOFING APPLICATIONS SHALL BE PRESSURE TREATED.
10. REFER TO CIVIL AND STRUCTURAL DRAWINGS FOR ADDITIONAL INFORMATION.

PLAN LEGEND

- EXISTING CONSTRUCTION
- NEW STUD WALL CONSTRUCTION
- POURED CONCRETE WALL
- NEW CMU WALL/INFILL ASSEMBLY
- NEW BRICK VENEER ON CMU BACKUP WALL
- INDICATES 1 HOUR FIRE RESISTIVE RATED WALL CONSTRUCTION
- INDICATES 2 HOUR FIRE RESISTIVE RATED WALL CONSTRUCTION

WALL TYPES SCHEDULE

C1 — 8" CLASSIFICATION D-2 CONCRETE MASONRY UNIT BACKUP WALL, REINFORCING PER STRUCTURAL DRAWINGS. AIR & VAPOR BARRIER. 2" POLYISO INSULATION. 1 3/4" AIR SPACE. STANDARD DEPTH BRICK VENEER. REFER TO DETAILS FOR MORE INFORMATION.
2-HR RATED WALL, UL DESIGN #U939.
NFPA 285 COMPLIANT ASSEMBLY.

C2 — 8" CLASSIFICATION D-2 CONCRETE MASONRY UNIT WALL, REINFORCING PER STRUCTURAL DRAWINGS. REFER TO WALL SECTIONS FOR HEIGHT. REFER TO DETAILS FOR MORE INFORMATION.
2-HR RATED WALL, UL DESIGN #U905

C3 — 12" CLASSIFICATION D-2 CONCRETE MASONRY UNIT WALL, REINFORCING PER STRUCTURAL DRAWINGS. REFER TO WALL SECTIONS FOR HEIGHT. REFER TO DETAILS FOR MORE INFORMATION.
2-HR RATED WALL, UL DESIGN #U905

THE ARCHITECTS
THE INTEGRITY, THE ABILITY, THE EXPERIENCE
THE ARCHITECTS
Robert B. Hurd, AIA
56 Arbor Street
Hartford, CT 06106
Tel: 860-232-2707

Crosskey Architects LLC
Architecture Preservation Interiors
750 Main Street, Hartford, CT 06103
T: (860)724-3000 F: (860)724-3013

CITIZEN'S BLOCK

28-34 PARK PLACE, VERNON CT

Owner: Town of Vernon - Administration

14 Park Place, Vernon CT 06066

NOT FOR CONSTRUCTION RELEASED FOR: BID

Drawn: PS
Issued: 03.17.2021
Status:

Revisions

NO	DATE	DESCRIPTION

A-130
THIRD FLOOR PLAN

Copyright © 2020

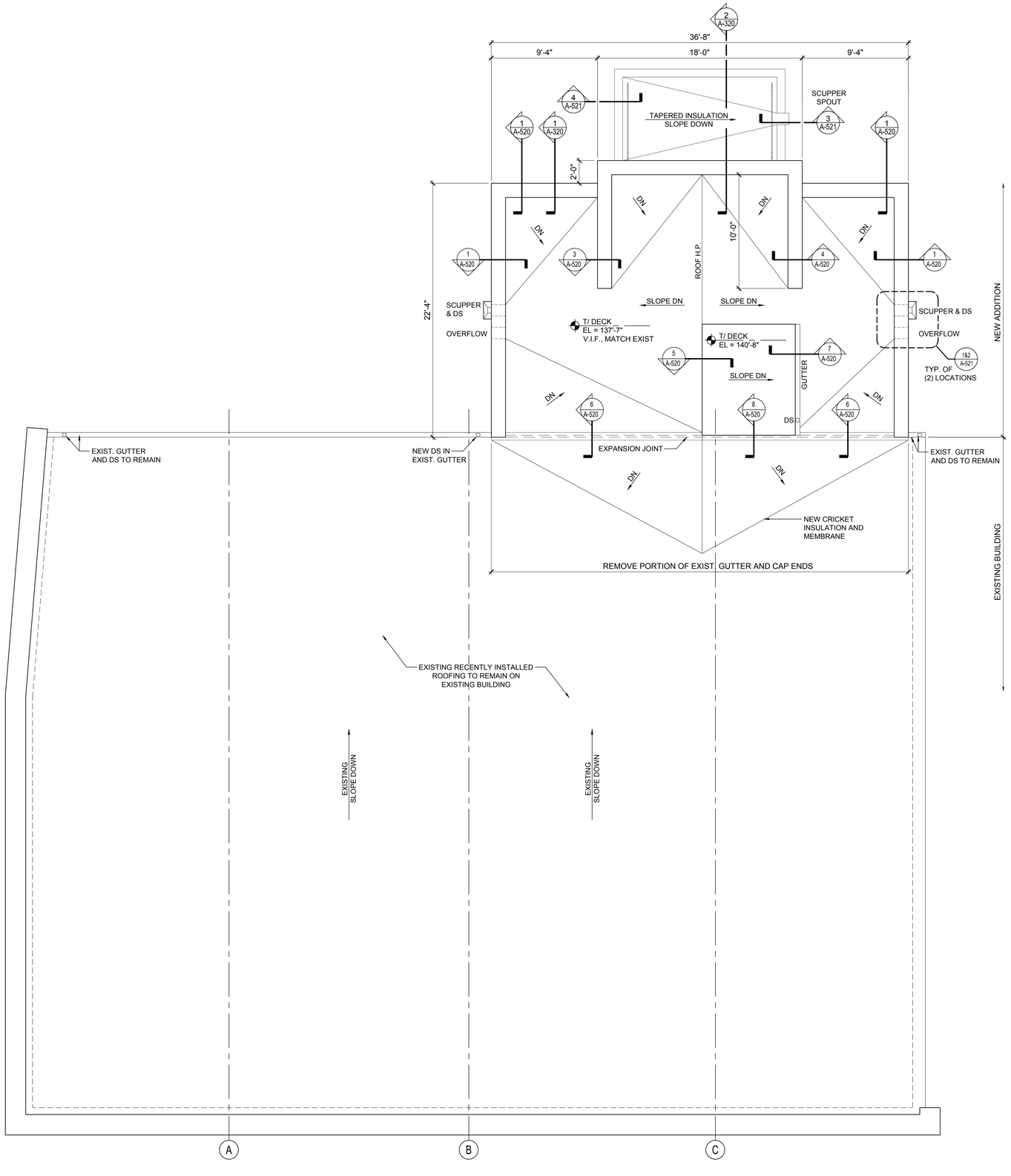

1 ROOF PLAN
SCALE: 1/4"=1'-0"

NORTH

ROOF GENERAL NOTES

1. ALL MATERIALS ARE TO BE NEW UNLESS NOTED OTHERWISE.
2. IF PLANS AND SPECIFICATIONS PROVIDE CONFLICTING INFORMATION, THEN THE STRICTEST, MOST EXPENSIVE INTERPRETATION SHALL APPLY.
3. CONTRACTOR SHALL VERIFY ALL CONDITIONS PRIOR TO COMMENCEMENT OF WORK. NOTIFY ARCHITECT OF ANY EXISTING CONDITIONS THAT DEVIATE FROM THE DRAWINGS OR SPECIFICATIONS WHICH WILL IMPACT THE WORK .
4. NEW ROOF SLOPES TO BE AS NOTED IN THE ROOF PLAN, OR A MINIMUM TO ½" PER FOOT IF NOT NOTED. ANY PONDING WATER ON THE ROOF SURFACE WILL NOT BE ACCEPTED.
5. PROVIDE THE MINIMUM POLYISOCYANURATE ROOF INSULATION TO ACHIEVE A MINIMUM R-VALUE OF R-30.
6. CONTRACTOR TO FOLLOW MANUFACTURER'S DETAILS AND INSTALLATION INSTRUCTIONS FOR A FULLY WARRANTY COMPLIANT FINISHED ASSEMBLY.
7. PROVIDE SPLASH BLOCKS ON WALKWAY PADS AT ALL LOCATIONS WHERE DOWNSPOUTS DISCHARGE ON ROOF SURFACES BELOW.
8. REFER TO STRUCTURAL GENERAL NOTES FOR WIND LOADING DESIGN CRITERIA. ROOF MANUFACTURER SHALL BE RESPONSIBLE FOR MEETING WIND SPEED RATINGS WITH ENTIRE ROOF SYSTEM.
9. ALL LUMBER IN CONTACT WITH CONCRETE OR MASONRY, OR UTILIZED IN ROOFING APPLICATIONS SHALL BE PRESSURE TREATED.

ROOF ASSEMBLY

1. FULLY ADHERED EPDM ROOF MEMBRANE.
2. (1) LAYER OF 3" + (1) LAYER OF 2 ½" POLYISO INSULATION WITH STAGGERED JOINTS. TOTAL THICKNESS 5 ½", MIN. R-VALUE OF R-30. PRODUCT PER SPECIFICATIONS.
3. PLYWOOD ROOF DECK ON ENGINEERED WOOD ROOF JOISTS PER STRUCTURAL DRAWINGS.

THE ARCHITECTS
THE INTEGRITY, THE ABILITY, THE EXPERIENCE
THE ARCHITECTS
Robert B. Hurd, AIA
54 Arbor Street
Hartford, CT 06106
Tel: 860-232-2707

Crosskey Architects LLC
Architecture Preservation Interiors
750 Main Street, Hartford, CT 06103
T: (860)724-3000 F: (860)724-3013

CITIZEN'S BLOCK

28-34 PARK PLACE, VERNON CT

Owner: Town of Vernon - Administration

14 Park Place, Vernon CT 06066

NOT FOR CONSTRUCTION RELEASED FOR: BID

Drawn: PS
Issued: 03.17.2021
Status:

Revisions

NO	DATE	DESCRIPTION

A-140
ROOF PLAN

Copyright © 2020

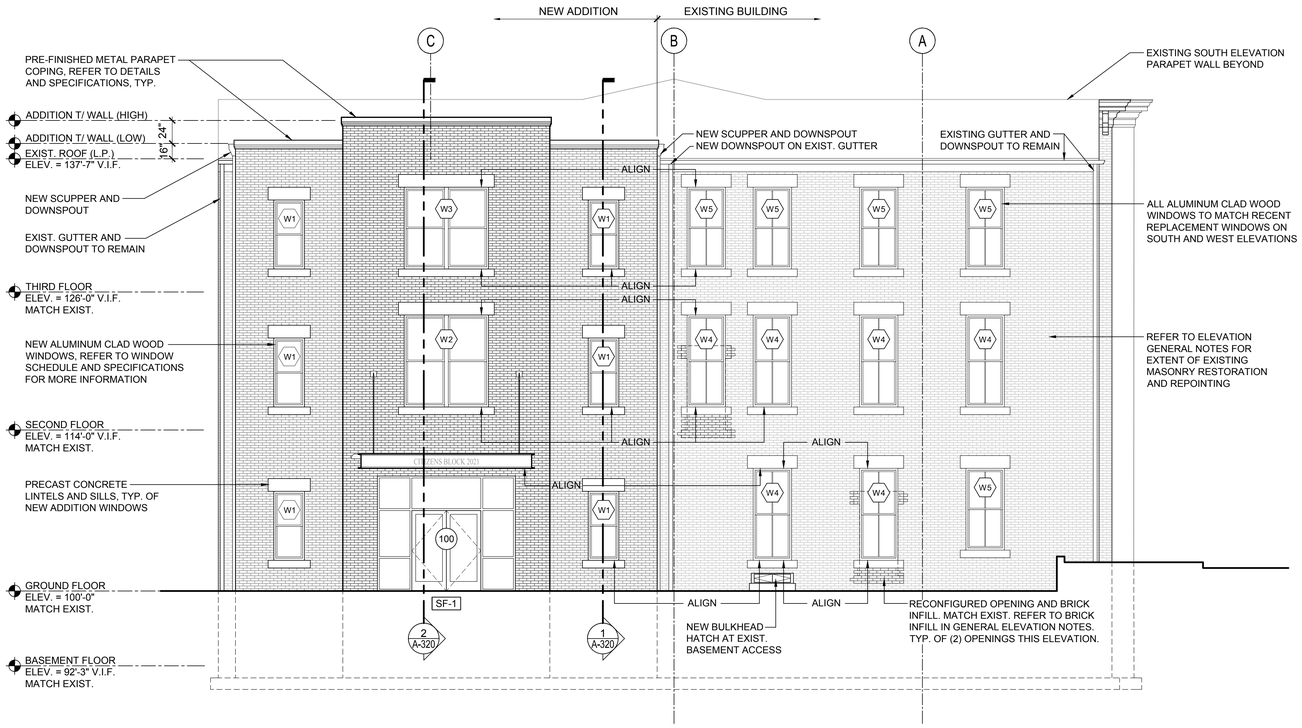

2 NORTH ELEVATION
SCALE: 3/16"=1'-0"

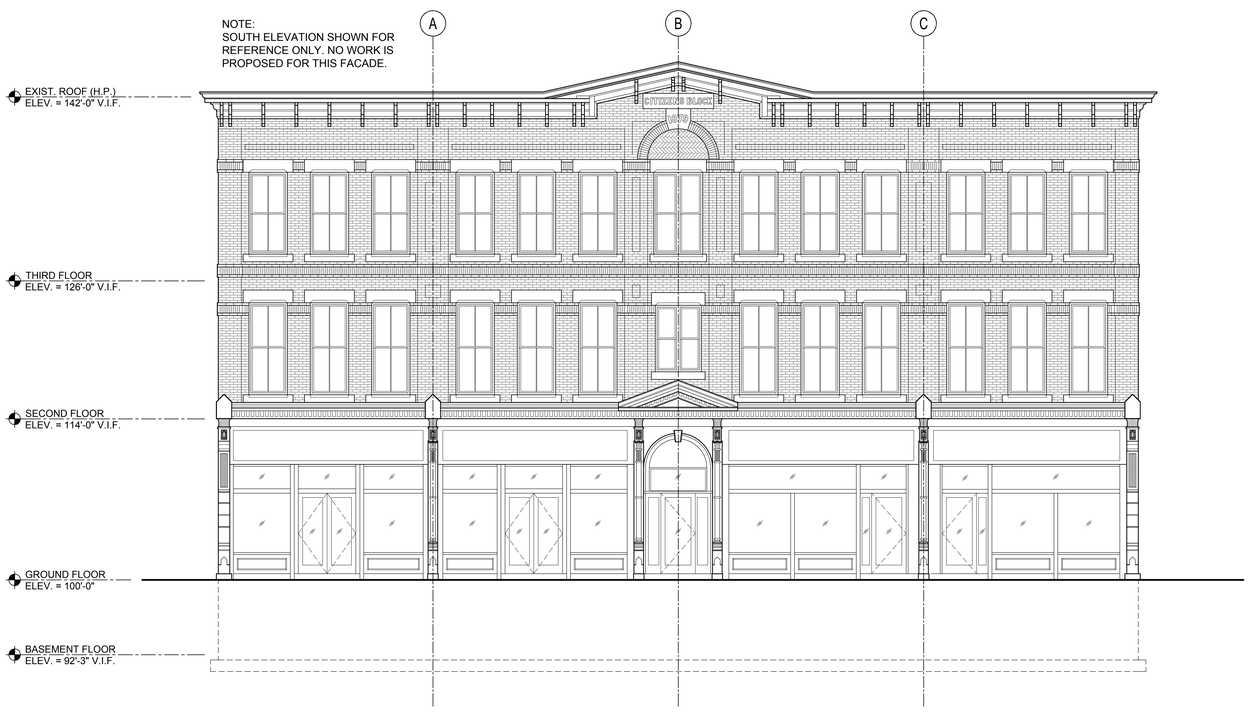

1 SOUTH ELEVATION
SCALE: 3/16"=1'-0"

ELEVATION GENERAL NOTES

1. ALL MATERIALS ARE TO BE NEW UNLESS NOTED OTHERWISE.
2. IF PLANS AND SPECIFICATIONS PROVIDE CONFLICTING INFORMATION, THEN THE STRICTEST, MOST EXPENSIVE INTERPRETATION SHALL APPLY.
3. EXISTING CONSTRUCTION SHOWN REPRESENTS OBSERVABLE CONDITIONS AT TIME OF FIELD SURVEY. CONTRACTOR SHALL FIELD VERIFY ALL DIMENSIONS AND EXISTING CONDITIONS PRIOR TO COMMENCEMENT OF WORK. NOTIFY THE ARCHITECT OF DISCREPANCIES, IF ANY.
4. DRAWINGS MAY NOT DETAIL EVERY EXISTING CONDITION OR INTERSECTION OF EXISTING TO NEW WORK. WHERE A DETAIL IS DEVELOPED AND REFERENCED FOR A SPECIFIC CONDITION, SAME OR SIMILAR DETAIL SHALL APPLY TO IDENTICAL OR SIMILAR CONDITIONS ELSEWHERE IN THE PROJECT.
5. NOTES SHOWN ON ONE ELEVATION SHALL APPLY TO ALL OTHER ELEVATIONS AND SIMILAR CONDITIONS.
6. POWER WASH ALL BRICK ON THE NORTH FACADE. DO NOT EXCEED 250 PSI.
7. CONTRACTOR TO EVALUATE EXTERIOR MASONRY ON NORTH SIDE OF BUILDING FOR AREAS REQUIRING MORTAR REPOINTING. MORTAR REPOINTING SHALL BE LIMITED TO AREAS OF THE EXISTING FACADE THAT WILL REMAIN EXPOSED TO THE WEATHER AFTER THE NEW ADDITION IS CONSTRUCTED. ASSUME 50% REPOINTING. (ASSUMED AREA OF REPOINTING = 750 SF). THIS SHALL NOT LIMIT THE SCOPE OF REPOINTING, BUT RATHER ESTABLISH A BIDDABLE ALLOWANCE FOR THE SCOPE OF WORK. PROVIDE UNIT PRICE FOR REPOINTING. CONTRACT TO BE ADJUSTED PER UNIT PRICE FOR ACTUAL AMOUNT OF REPOINTING PERFORMED.

7.1. IN ADDITION TO ANY DETERIORATED/ UNSOUND MORTAR JOINTS, CONTRACTOR SHALL FILL ANY ANY HOLES AND MORTAR JOINTS DEEPER THAN ½". NEW JOINT PROFILE TO MATCH EXISTING.

7.2. PRIOR TO REPOINTING ANY MASONRY, THE CONTRACTOR SHALL HAVE EXISTING MASONRY, BRICK AND MORTAR TESTED BY A TESTING LABORATORY TO DETERMINE THE PROPER STRENGTH OF THE NEW MORTAR MIX. NEW MORTAR SPECIFICATIONS SHALL MATCH THE COMPOSITIONS AND COMPRESSIVE STRENGTH OF THE EXISTING MORTAR.

7.3. NEW MASONRY UNITS AND MORTAR USED AT THE EXISTING BUILDING SHALL MATCH EXISTING WITH REGARDS TO SIZE, COLOR, SHAPE, TEXTURE, STRENGTH AND COMPOSITION. RAKE AND TOOL NEWLY POINTED JOINTS TO MATCH EXISTING JOINTS WITH REGARDS TO SHAPE, TEXTURE AND COLOR. PROVIDE A 5'x5' MOCK-UP SAMPLE FOR ARCHITECT'S REVIEW AND APPROVAL.

THE ARCHITECTS
THE INTEGRITY, THE ABILITY, THE EXPERIENCE
THE ARCHITECTS
Robert B. Hunt, AIA
56 Arbor Street
Hartford, CT 06106
Tel: 860-232-2707

Crosskey Architects LLC
Architecture Preservation Interiors
750 Main Street, Hartford, CT 06103
T: (860)724-3000 F: (860)724-3013

CITIZEN'S BLOCK
28-34 PARK PLACE, VERNON CT
Owner: Town of Vernon - Administration
14 Park Place, Vernon CT 06066

NOT FOR CONSTRUCTION RELEASED FOR: BID

Drawn: PS
Issued: 03.17.2021
Status:

Revisions

NO	DATE	DESCRIPTION

A-210
EXTERIOR ELEVATIONS

Copyright © 2020

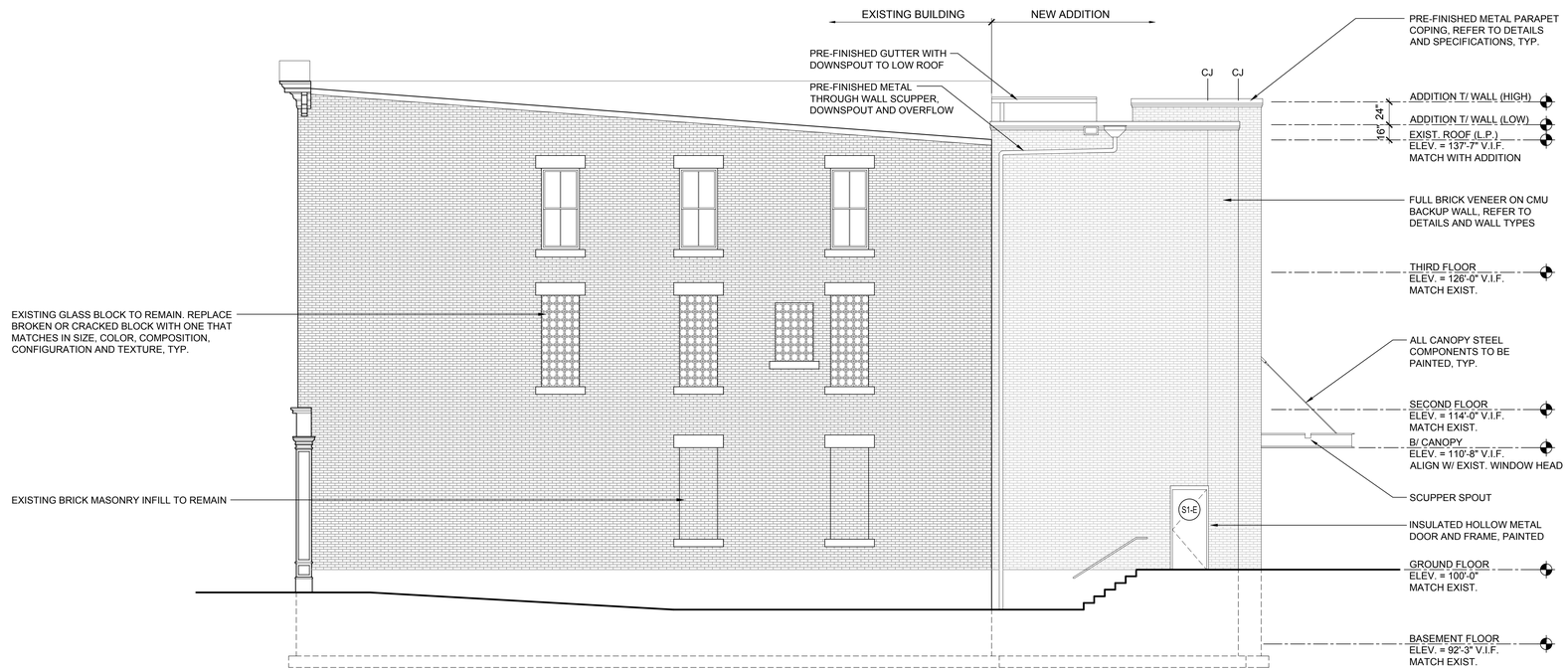

2 EAST ELEVATION
SCALE: 3/16"=1'-0"

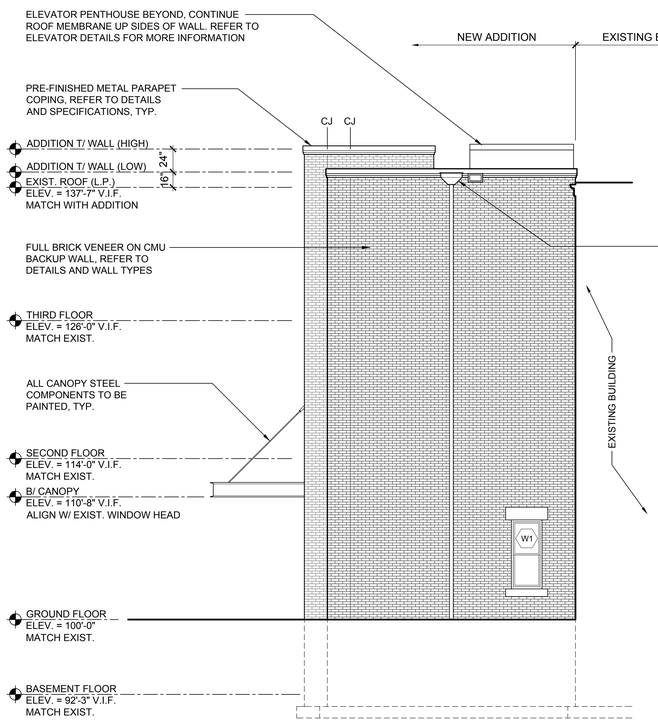

3 PARTIAL WEST ELEVATION
SCALE: 3/16"=1'-0"

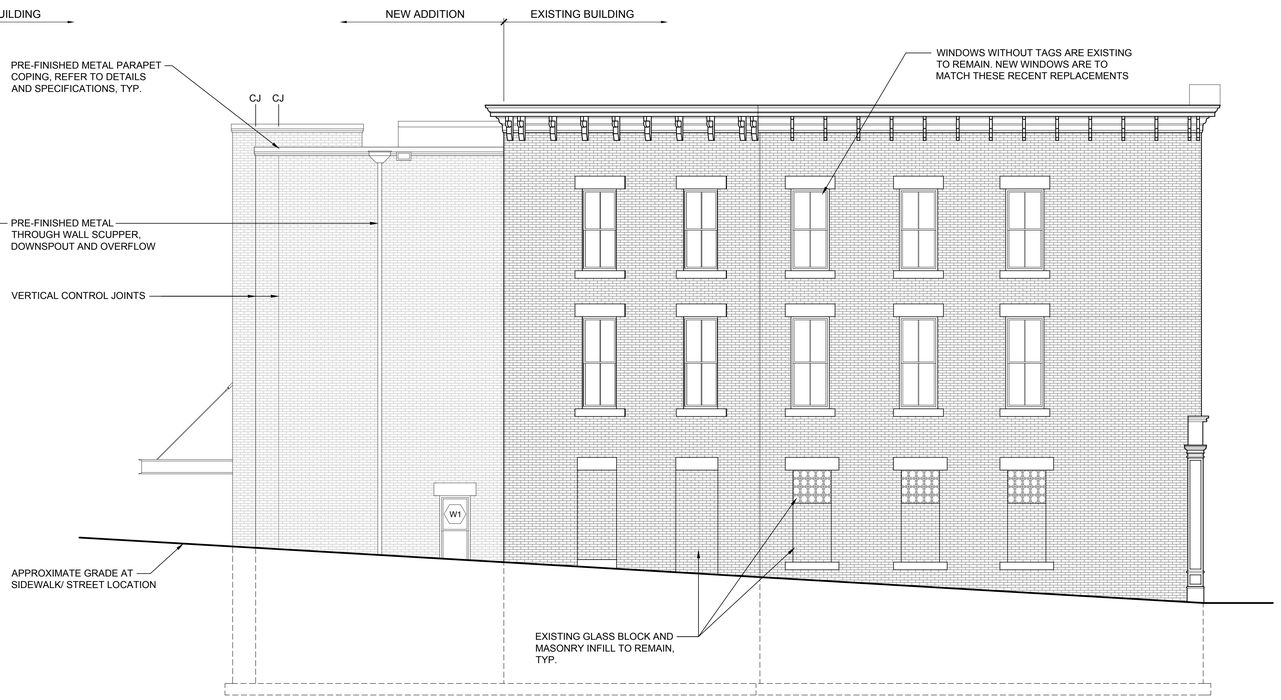

1 WEST ELEVATION (STREET VIEW)
SCALE: 3/16"=1'-0"

THE ARCHITECTS
THE INTEGRITY, THE ABILITY, THE EXPERIENCE
THE ARCHITECTS
Robert B. Hunt, AIA
56 Arbor Street
Hartford, CT 06106
Tel: 860-232-2707

Crosskey Architects LLC
Architecture Preservation Interiors
750 Main Street, Hartford, CT 06103
T: (860)724-3000 F: (860)724-3013

CITIZEN'S BLOCK
28-34 PARK PLACE, VERNON CT
Owner: Town of Vernon - Administration
14 Park Place, Vernon CT 06066

NOT FOR CONSTRUCTION RELEASED FOR: BID

Drawn: PS
Issued: 03.17.2021
Status:

Revisions

NO	DATE	DESCRIPTION

A-211
EXTERIOR ELEVATIONS

Copyright © 2020

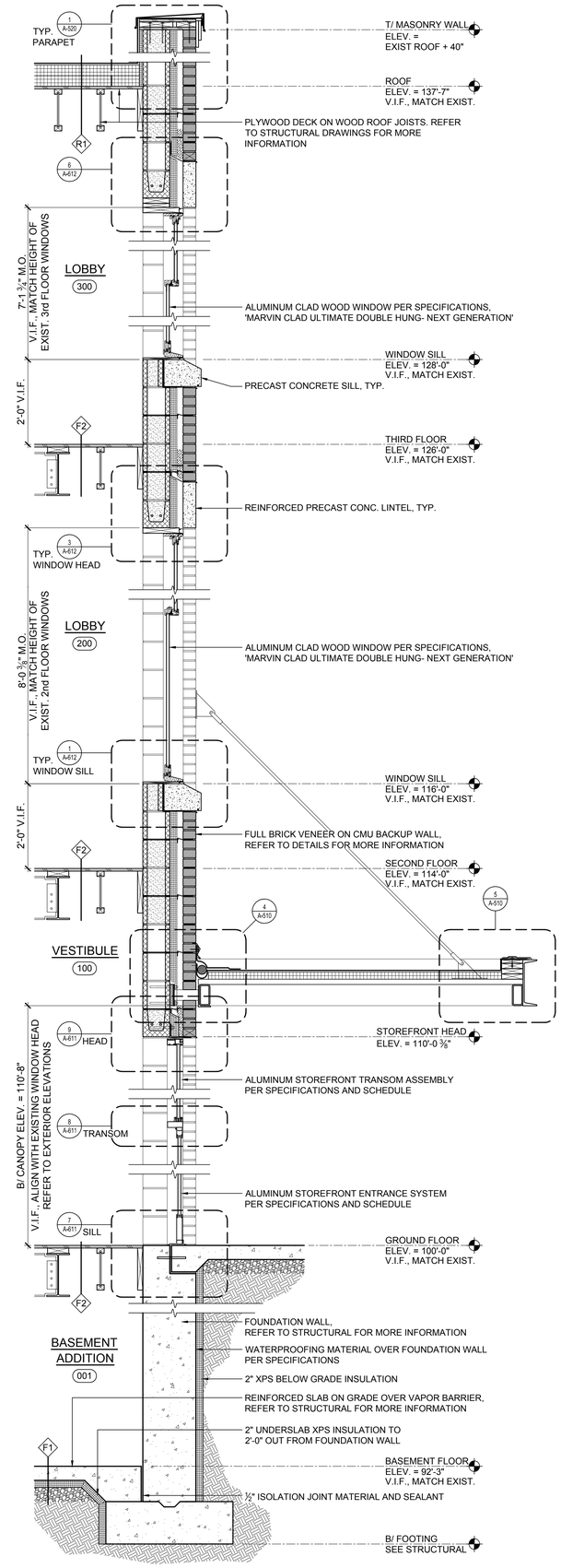

2 WALL SECTION
SCALE: 3/4"=1'-0"

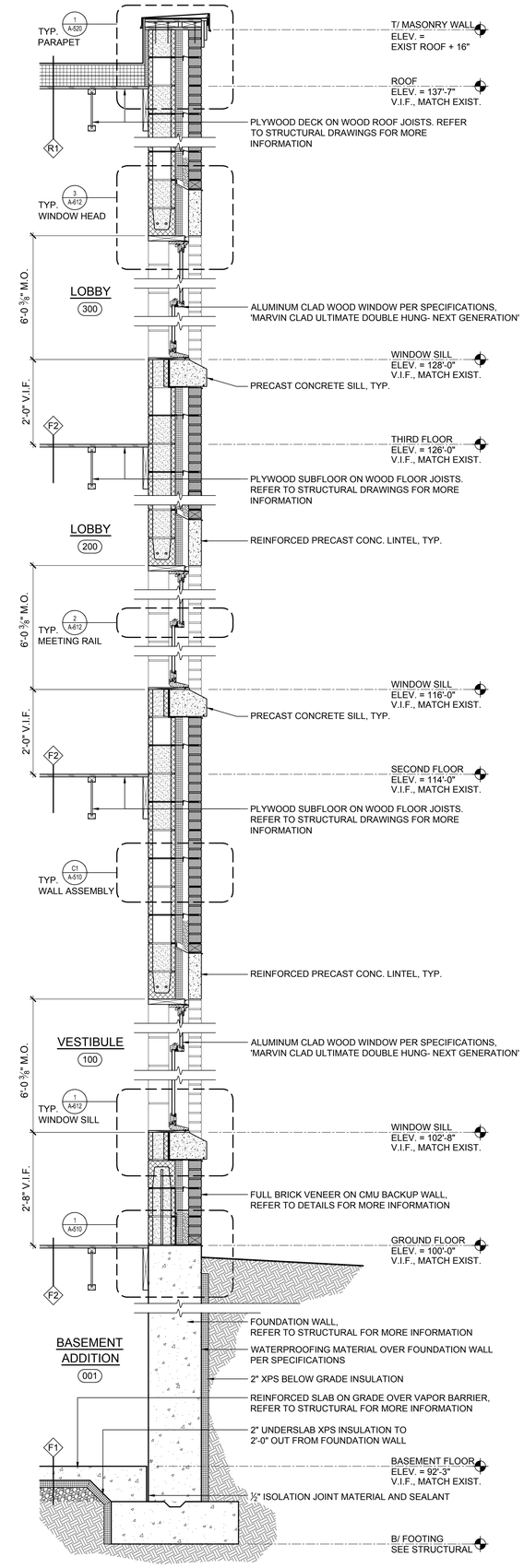

1 WALL SECTION
SCALE: 3/4"=1'-0"

THE ARCHITECTS
THE INTEGRITY, THE ABILITY, THE EXPERIENCE
THE ARCHITECTS
Robert B. Hurd, AIA
54 Arbor Street
Hartford, CT 06106
Tel: 860-232-2707

Crosskey Architects LLC
Architecture Preservation Interiors
750 Main Street, Hartford, CT 06103
T: (860)724-3000 F: (860)724-3013

CITIZEN'S BLOCK
28-34 PARK PLACE, VERNON CT
Owner: Town of Vernon - Administration
14 Park Place, Vernon CT 06066

NOT FOR CONSTRUCTION RELEASED FOR: BID

Drawn: PS
Issued: 03.17.2021
Status:

Revisions

NO	DATE	DESCRIPTION

A-320
WALL SECTIONS

Copyright © 2020

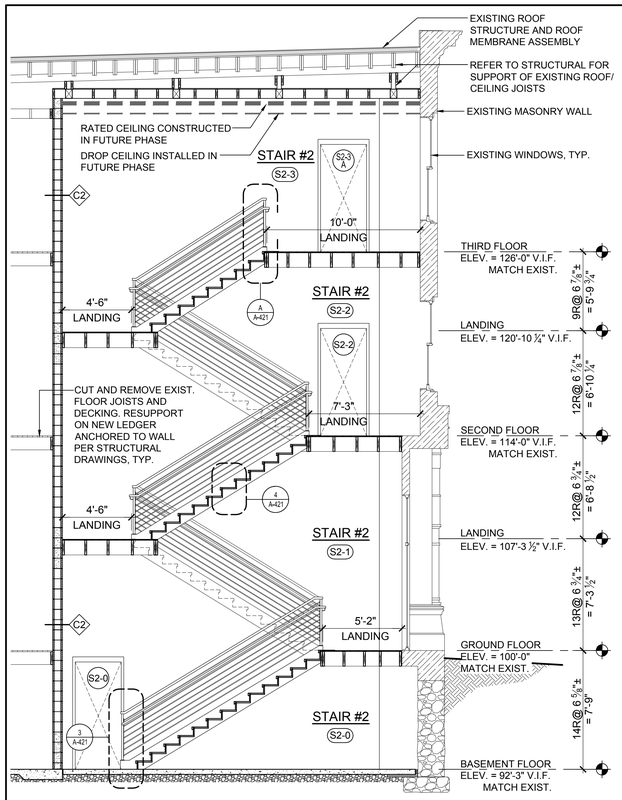

2 STAIR #2 - SECTION
SCALE: 1/4"=1'-0"

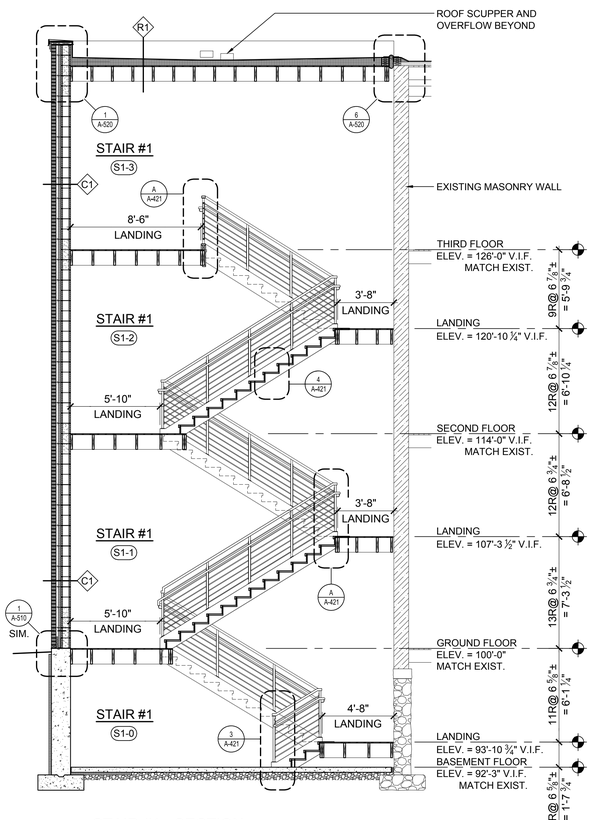

2 STAIR #2 - SECTION
SCALE: 1/4"=1'-0"

STAIR GENERAL NOTES

1. STAIR AND LANDING SCOPE OF WORK IS CONTRACTOR DESIGN BUILD. CONTRACTOR TO VERIFY IN FIELD ALL CONDITIONS INCLUDING TOP AND BOTTOM OF STAIR ELEVATIONS AND INTERMEDIATE LANDING ELEVATIONS.

2. SHOP DRAWINGS SHALL INDICATE AND BE DESIGNED TO ACTUAL FIELD MEASURED DIMENSIONS. CONTRACTOR SHALL SUBMIT SHOP DRAWINGS OF STAIRS, LANDINGS, GUARD/HANDRAILS AND CONNECTIONS TO STRUCTURE FOR REVIEW BY THE STRUCTURAL ENGINEER OF RECORD. SHOP DRAWINGS TO BE SEALED AND SIGNED BY A PROFESSIONAL ENGINEER LICENSED IN THE STATE OF CONNECTICUT.

3. DRAWINGS SHOW DESIGN INTENT AND GENERAL GUIDELINES FOR THE FINAL DESIGN AND STAIR CONSTRUCTION. IT IS THE CONTRACTOR'S RESPONSIBILITY TO DEVELOP THE FINAL GEOMETRY & LAYOUT, AND TO SIZE ALL MEMBERS AND ANCHORAGE ITEMS TO SUPPORT THE REQUIRED CONCENTRATED AND UNIFORM LOADS, INCLUDING BUT NOT LIMITED TO 100PSF LIVE LOAD AND 20 PSF DEAD LOAD.

4. STAIRS SHALL COMPLY WITH ALL APPLICABLE STATE AND LOCAL BUILDING CODES, INCLUDING BUT NOT LIMITED TO:
   - 4.1. 2015 IBC SECTION 1011
   - 4.2. 2015 IBC SECTION 1014
   - 4.3. 2015 IBC SECTION 1015
   - 4.4. 2015 IBC SECTION 1606
   - 4.5. 2015 IBC SECTION 1607 INCLUDING TABLE 1607.1 AND SECTION 1607.8

5. CONTRACTOR SHALL COORDINATE THE CONNECTIONS FROM THE WOOD STAIR MEMBERS TO THE STRUCTURE. COORDINATION SHALL INCLUDE, BUT NOT BE LIMITED TO, LOCATING ANY REQUIRED SOLID GROUTED CELLS IN MASONRY WALLS.

STAIR BID ALTERNATE

1. IN LIEU OF WOOD STRUCTURE STAIRS AND LANDINGS, FURNISH AND INSTALL CONCRETE FILLED METAL STAIR PANS AND LANDINGS.

2. STAIR STRINGERS TO BE CHANNEL MEMBERS. GUARDRAIL AND HANDRAIL DESIGN SHALL BE SIMILAR AS SHOWN BUT UTILIZING ALL METAL COMPONENTS.

3. CONTRACTOR SHALL SUBMIT SHOP DRAWINGS OF STAIRS, LANDINGS, GUARD/HANDRAILS AND CONNECTIONS TO STRUCTURE FOR REVIEW BY THE STRUCTURAL ENGINEER OF RECORD.

4. ALL WELDS TO BE GROUND SMOOTH.

5. ALL METAL STAIR COMPONENTS TO BE SHOP PRIMED AND FINISH PAINTED IN THE FIELD.

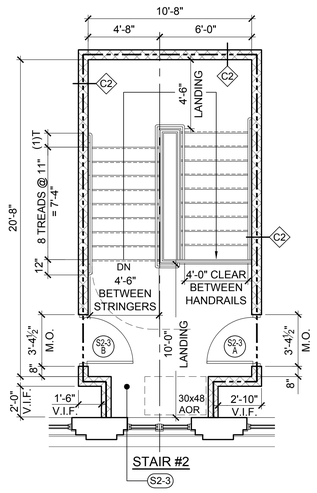

7 STAIR #2 - THIRD FLOOR PLAN
SCALE: 1/4"=1'-0"

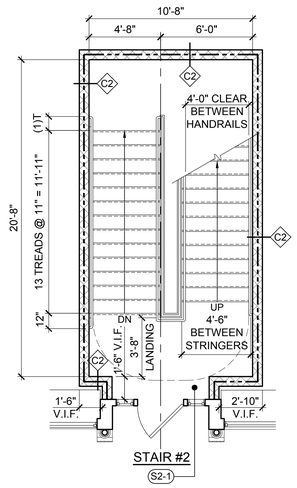

5 STAIR #2 - FIRST FLOOR PLAN
SCALE: 1/4"=1'-0"

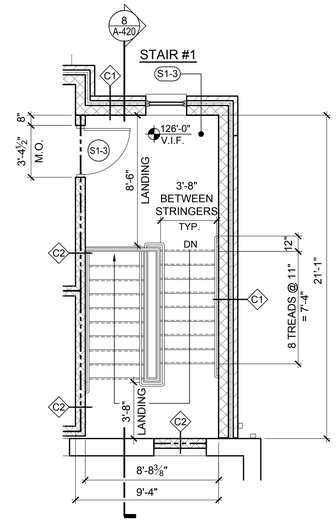

3 STAIR #1 - THIRD FLOOR PLAN
SCALE: 1/4"=1'-0"

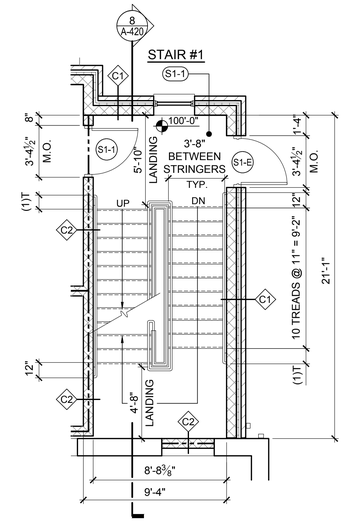

1 STAIR #1 - FIRST FLOOR PLAN
SCALE: 1/4"=1'-0"

2 STAIR #1 - SECTION
SCALE: 1/4"=1'-0"

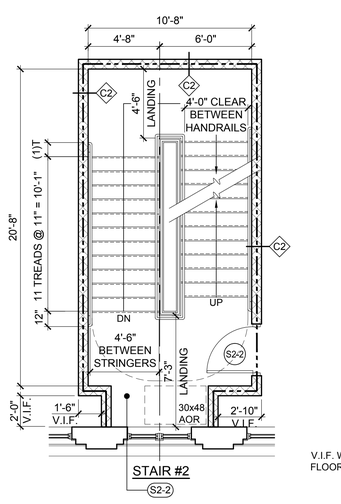

6 STAIR #2 - SECOND FLOOR PLAN
SCALE: 1/4"=1'-0"

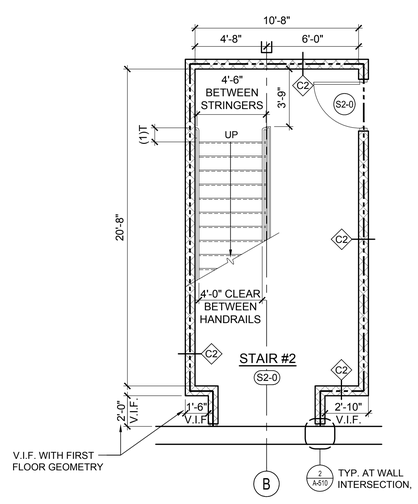

4 STAIR #2 - BASEMENT FLOOR PLAN
SCALE: 1/4"=1'-0"

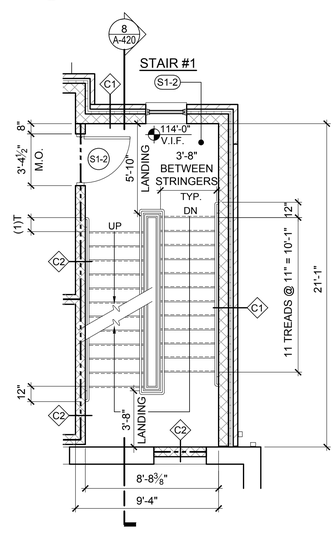

2 STAIR #1 - SECOND FLOOR PLAN
SCALE: 1/4"=1'-0"

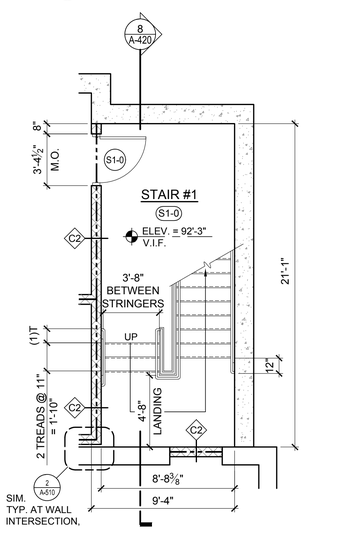

0 STAIR #1 - BASEMENT FLOOR PLAN
SCALE: 1/4"=1'-0"

THE ARCHITECTS
THE INTEGRITY, THE ABILITY, THE EXPERIENCE
THE ARCHITECTS
Robert B. Hunt, AIA
54 Arbor Street
Hartford, CT 06106
Tel: 860-232-2707

Crosskey Architects LLC
Architecture Preservation Interiors
750 Main Street, Hartford, CT 06103
T: (860)724-3000 F: (860)724-3013

CITIZEN'S BLOCK
28-34 PARK PLACE, VERNON CT
Owner: Town of Vernon - Administration
14 Park Place, Vernon CT 06066

NOT FOR CONSTRUCTION RELEASED FOR: BID

Drawn: PS
Issued: 03.17.2021
Status:

Revisions

NO	DATE	DESCRIPTION

A-420
ENLARGED STAIR PLANS & SECTIONS

Copyright © 2020

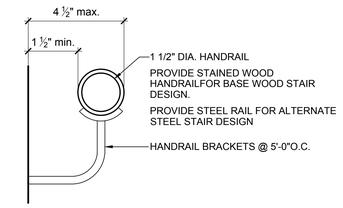

HANDRAIL NOTES:

1. HANDRAILS SHALL BE 34" ABOVE STAIR NOSING AND WALKING SURFACES.
2. HANDRAILS ENDS SHALL BE RETURNED INTO WALLS OR POSTS.
3. HANDRAILS SHALL EXTEND 1'-0" BEYOND THE TOP RISER.
4. AT THE BOTTOM OF STAIR, HANDRAIL SHALL CONTINUE TO SLOPE FOR A DISTANCE OF (1) TREAD DEPTH

2 HANDRAIL DETAILS

SCALE: 1 1/2"=1'-0"

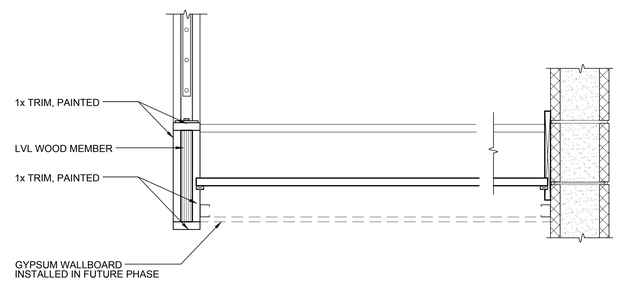

5 STAIR CONSTRUCTION DETAIL

SCALE: 1 1/2"=1'-0"

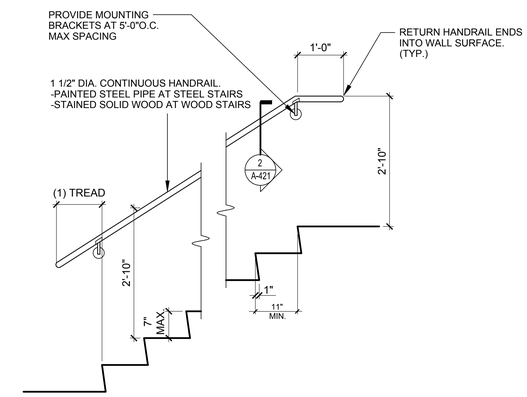

1 WALL HANDRAIL DIAGRAM

SCALE: 3/4"=1'-0"

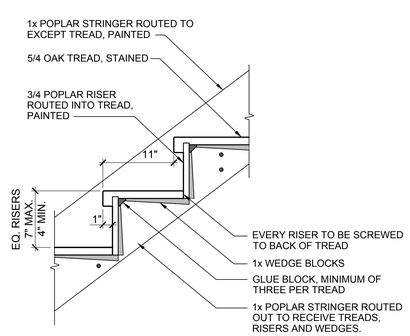

4 STAIR CONSTRUCTION DETAIL

SCALE: 1 1/2"=1'-0"

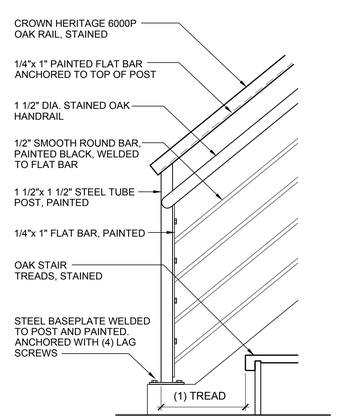

3 BALUSTRADE DETAIL

SCALE: 1 1/2"=1'-0"

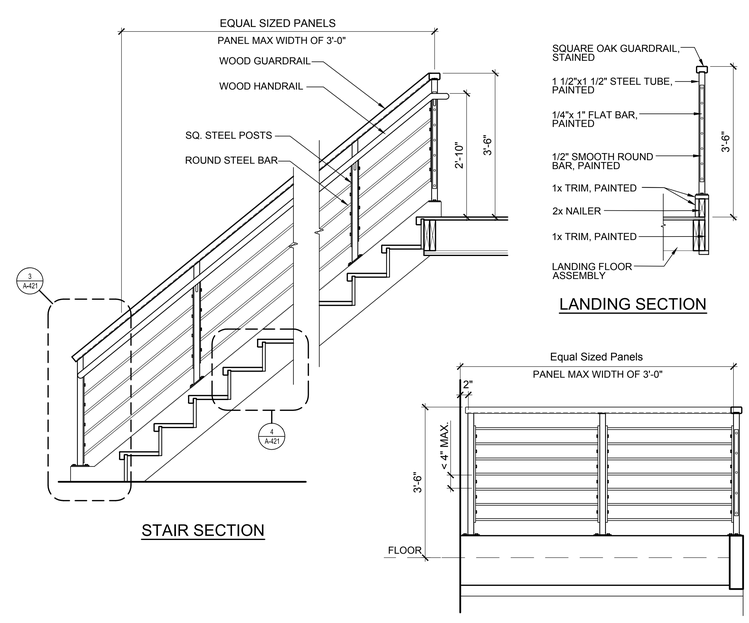

A WOOD STAIR DIAGRAM

SCALE: 3/4"=1'-0"

THE ARCHITECTS
THE INTEGRITY, THE ABILITY, THE EXPERIENCE
THE ARCHITECTS
Robert B. Hurd, AIA
56 Arbor Street
Hartford, CT 06106
Tel: 860-232-2707

Crosskey Architects LLC
Architecture Preservation Interiors
750 Main Street, Hartford, CT 06103
T: (860)724-3000 F: (860)724-3013

CITIZEN'S BLOCK

28-34 PARK PLACE, VERNON CT

Owner: Town of Vernon - Administration

14 Park Place, Vernon CT 06066

NOT FOR CONSTRUCTION RELEASED FOR: BID

Drawn: PS
Issued: 03.17.2021
Status:

Revisions

NO	DATE	DESCRIPTION

A-421

STAIR DETAILS

Copyright © 2020

ELEVATOR GENERAL NOTES

1. CONTRACTOR TO VERIFY IN FIELD ALL FLOOR ELEVATIONS TO MATCH FLOORS IN EXISTING BUILDING.
2. ELEVATOR MODEL USED AS BASIS FOR THE HOISTWAY DESIGN:
   - 2.1. KONE ECOSPACE 3500
   - 2.2. IBC STRETCHER SIZE
   - 2.3. INTEGRATED CONTROL PANEL AT TOP LEVEL
3. FOR BID PURPOSES, CONTRACTOR TO ASSUME FURNISHING A MIN. 7500# CAPACITY W8x18 STEEL HOIST BEAM.
4. FOR BID PURPOSES, CONTRACTOR TO ASSUME FULLY GROUTING A 16" WIDE STRIP OF CMU CELLS FULL HEIGHT OF HOISTWAY ON EACH SIDE WALL FOR FUTURE RAIL MOUNTING AS SHOWN ON DRAWING.
5. G.C. TO CONTRACT WITH ELEVATOR VENDOR TO PROCURE SHOP DRAWINGS TO THE LEVEL OF DETAIL REQUIRED TO CONSTRUCT THE ELEVATOR HOISTWAY. SHOP DRAWINGS SHALL UTILIZE CONTRACTOR'S FIELD VERIFIED FLOOR ELEVATIONS. SHOP DRAWINGS SHALL INDICATE SIZE OF DOOR AND CONTROLLER ROUGH OPENINGS, AND LOCATIONS OF FULLY GROUTED CELLS OR VENDOR SUPPLIED EMBEDS.
6. CONTRACTOR SHALL UTILIZE ELEVATOR VENDOR SUPPLIED HOIST BEAM AND EMBEDS IF AVAILABLE AND FEASIBLE.
7. COORDINATE HOISTWAY CONSTRUCTION SCOPE OF WORK AND PREPARATORY WORK WITH ELEVATOR VENDOR'S REQUIREMENTS.

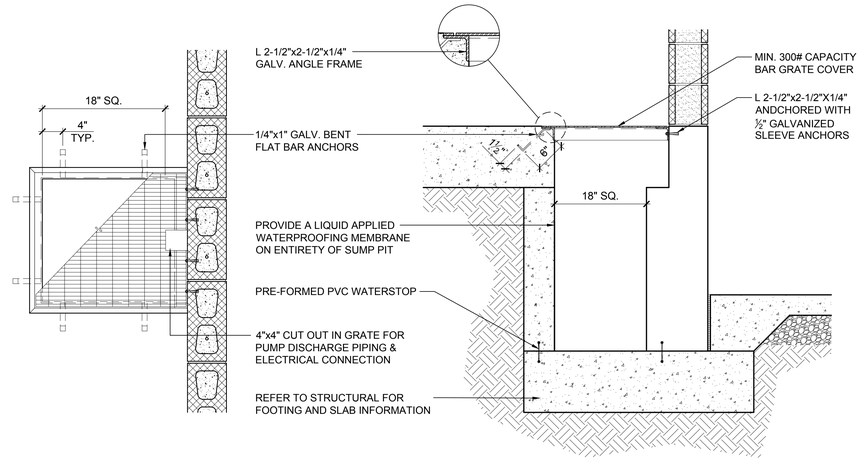

A SUMP PIT DETAIL
SCALE: 1"=1'-0"

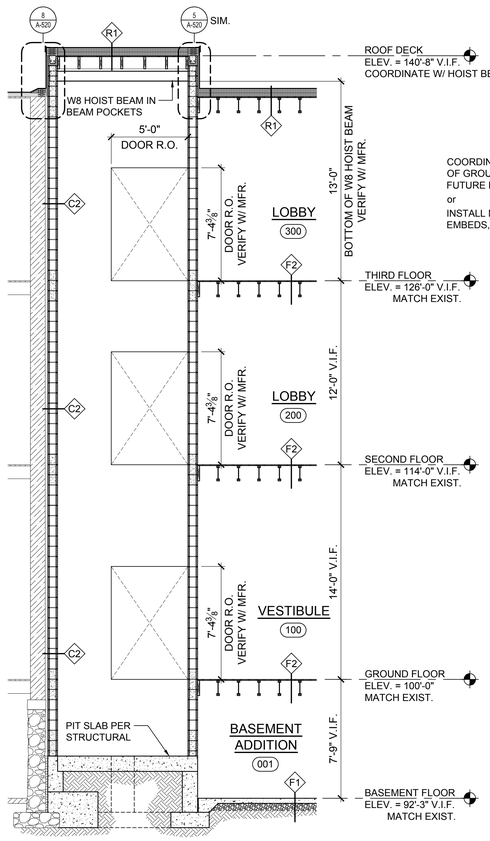

5 ELEVATOR - SECTION
SCALE: 1/4"=1'-0"

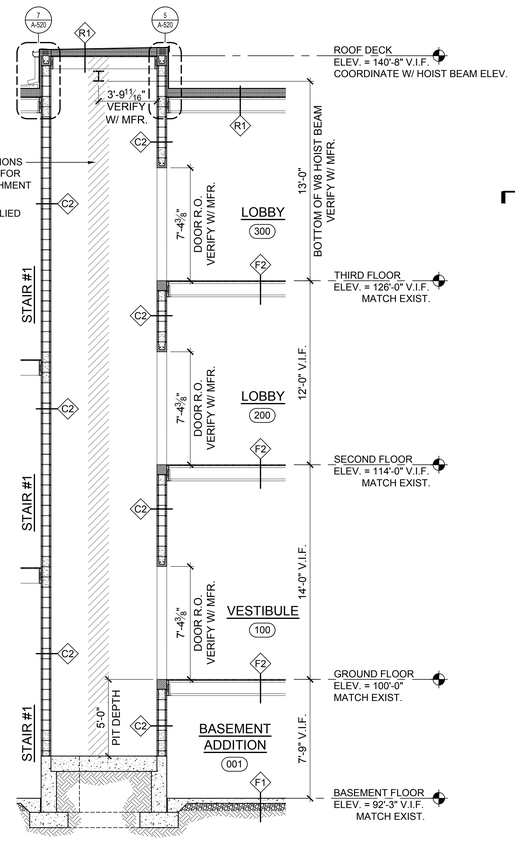

4 ELEVATOR - SECTION
SCALE: 1/4"=1'-0"

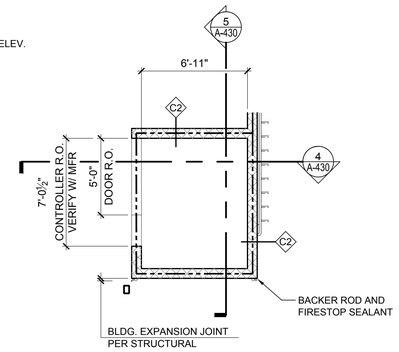

3 ELEVATOR - THIRD FLOOR PLAN
SCALE: 1/4"=1'-0"

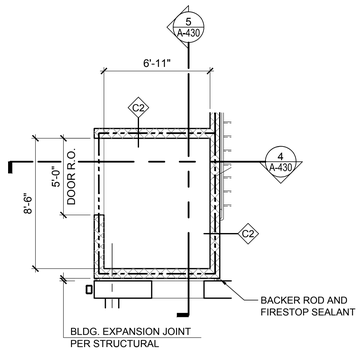

1 ELEVATOR - FIRST FLOOR PLAN
SCALE: 1/4"=1'-0"

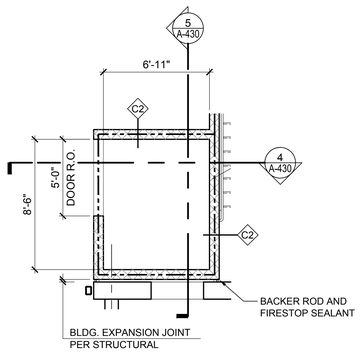

2 ELEVATOR - SECOND FLOOR PLAN
SCALE: 1/4"=1'-0"

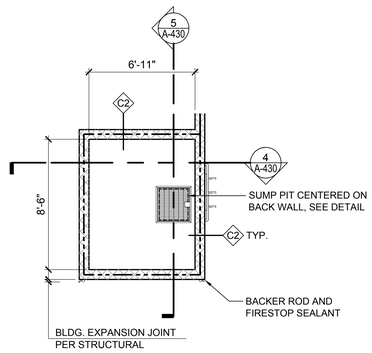

0 ELEVATOR - BASEMENT FLOOR PLAN
SCALE: 1/4"=1'-0"

THE ARCHITECTS
The Integrity, The Ability, The Experience
THE ARCHITECTS
Robert B. Hurd, AIA
54 Arbor Street
Hartford, CT 06106
Tel: 860-232-2707

Crosskey Architects LLC
Architecture Preservation Interiors
750 Main Street, Hartford, CT 06103
T: (860)724-3000 F: (860)724-3013

CITIZEN'S BLOCK
28-34 PARK PLACE, VERNON CT
Owner: Town of Vernon - Administration
14 Park Place, Vernon CT 06066

NOT FOR CONSTRUCTION RELEASED FOR: BID

Drawn: PS
Issued: 03.17.2021
Status:

Revisions

NO	DATE	DESCRIPTION

A-430
ENLARGED ELEVATOR PLANS & SECTIONS

Copyright © 2020

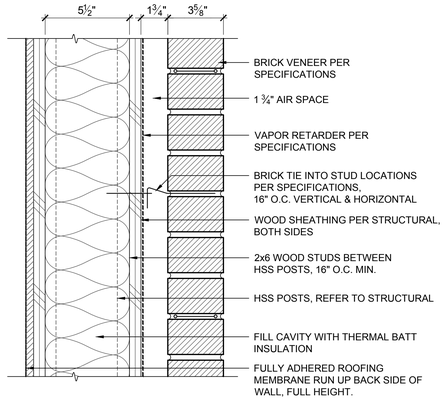

W1 BRICK VENEER ON WOOD
SCALE: 3"=1'-0"

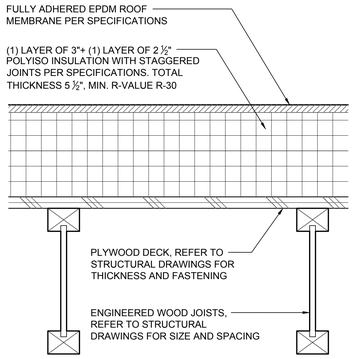

R1 ROOF ASSEMBLY
SCALE: 3"=1'-0"

3 RESERVED
SCALE: 3"=1'-0"

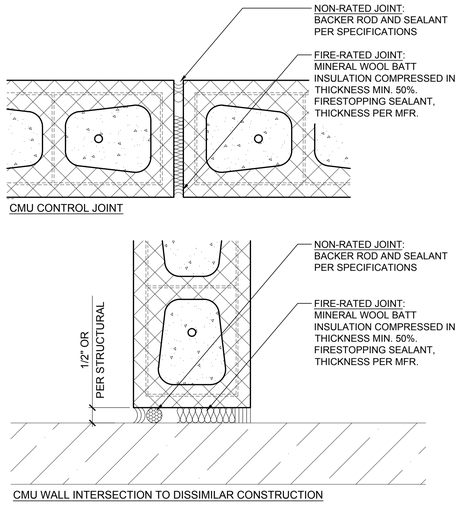

2 RESERVED
SCALE: 3"=1'-0"

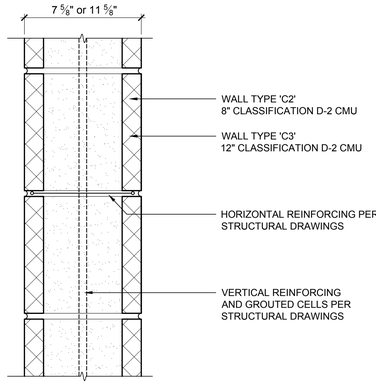

C2 2 HR RATED CMU WALL (8" NOMINAL)
SCALE: 3"=1'-0" UL No. U905

C3 2 HR RATED CMU WALL (12" NOMINAL)
SCALE: 3"=1'-0" UL No. U905

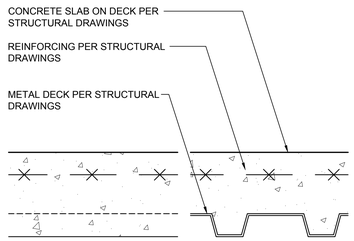

F3 2 HR RATED CONCRETE SLAB ON METAL DECK
SCALE: 3"=1'-0" PER CALCULATED FIRE RESISTANCE METHOD SEE STRUCTURAL FOR MORR EINFORMATION

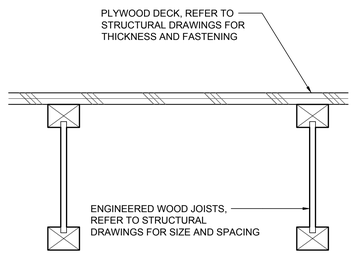

F2 FLOOR ASSEMBLY: FLOORS 1-3
SCALE: 3"=1'-0"

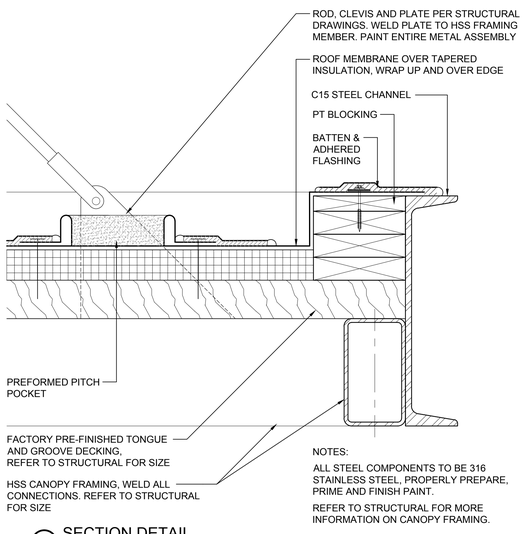

NOTES:
ALL STEEL COMPONENTS TO BE 316 STAINLESS STEEL, PROPERLY PREPARE, PRIME AND FINISH PAINT.
REFER TO STRUCTURAL FOR MORE INFORMATION ON CANOPY FRAMING.

5 SECTION DETAIL
SCALE: 3"=1'-0"

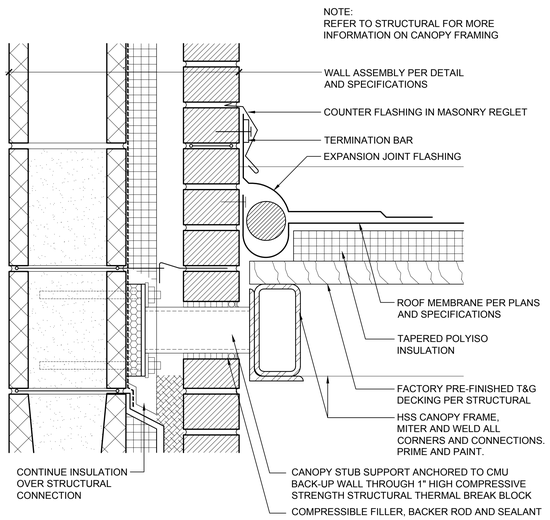

4 SECTION DETAIL
SCALE: 3"=1'-0"

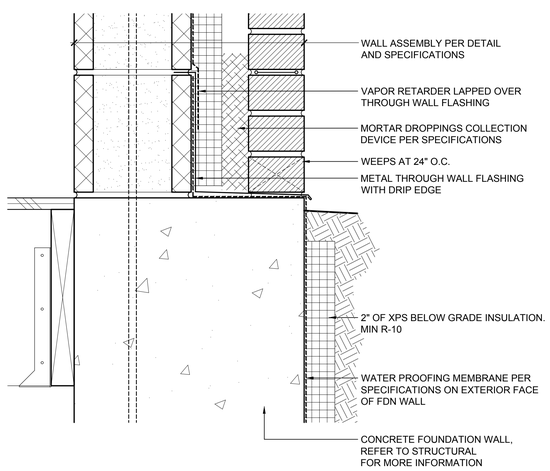

1 SECTION DETAIL
SCALE: 3"=1'-0"

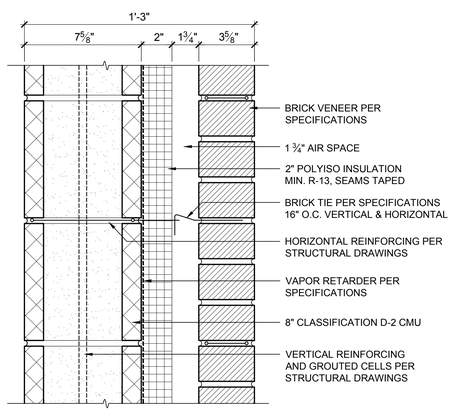

C1 2 HR RATED BRICK VENEER ON CMU
SCALE: 3"=1'-0" UL No. U939
NFPA 285 COMPLIANT ASSEMBLY

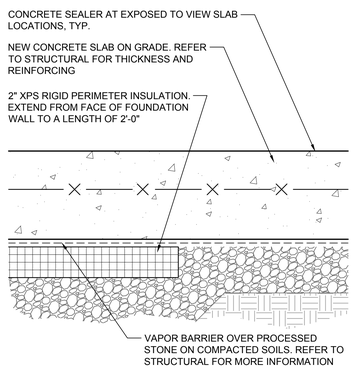

F1 SLAB ON GRADE FLOOR ASSEMBLY
SCALE: 3"=1'-0"

THE ARCHITECTS
THE INTEGRITY, THE ABILITY, THE EXPERIENCE
THE ARCHITECTS
Robert B. Hurd, AIA
54 Arbor Street
Hartford, CT 06106
Tel: 860-232-2707

Crosskey Architects LLC
Architecture Preservation Interiors
750 Main Street, Hartford, CT 06103
T: (860)724-3000 F: (860)724-3013

CITIZEN'S BLOCK
28-34 PARK PLACE, VERNON CT
Owner: Town of Vernon - Administration
14 Park Place, Vernon CT 06066

NOT FOR CONSTRUCTION RELEASED FOR: BID

Drawn: PS
Issued: 03.17.2021
Status:

Revisions

NO	DATE	DESCRIPTION

A-510
CONSTRUCTION ASSEMBLIES AND DETAILS

Copyright © 2020

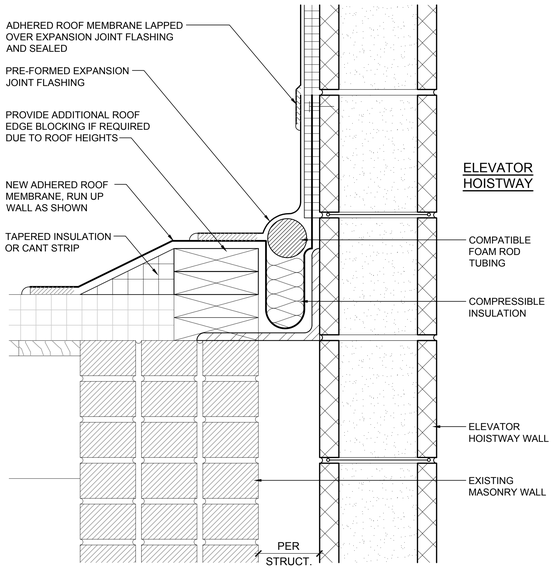

8 EXPANSION JOINT AT WALL DETAIL
SCALE: 3"=1'-0"

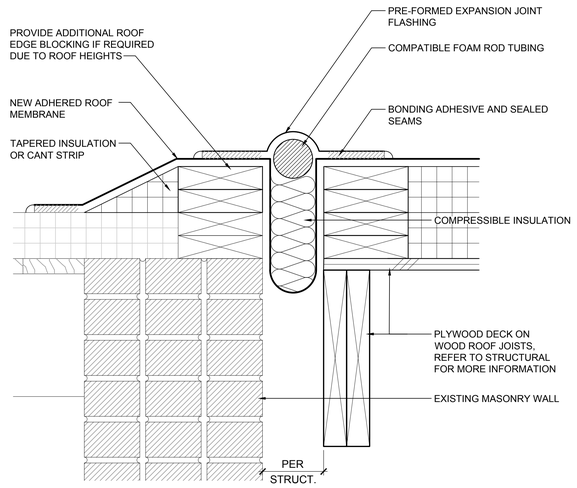

6 EXIST. TO NEW EXPANSION JOINT DETAIL
SCALE: 3"=1'-0"

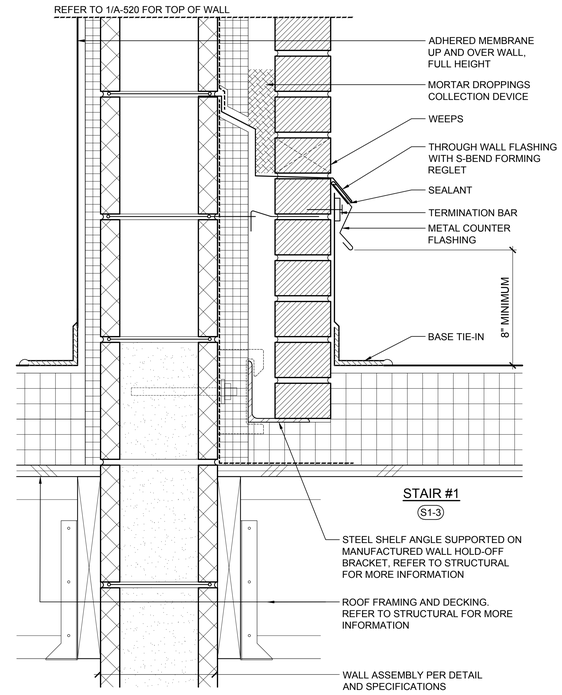

4 WING WALL AT ROOF DETAIL
SCALE: 3"=1'-0"

2 RESERVED
SCALE: 3"=1'-0"

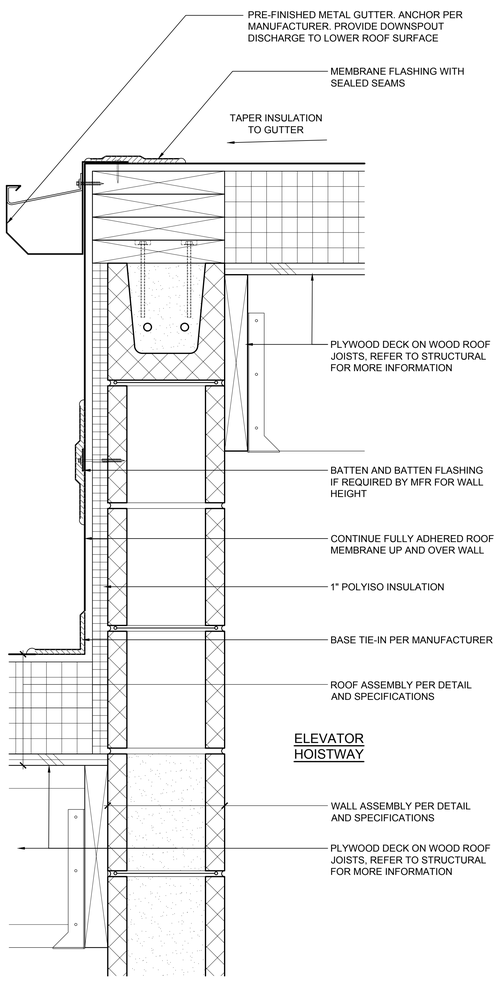

7 ELEVATOR PENTHOUSE ROOF EDGE DETAIL
SCALE: 3"=1'-0"

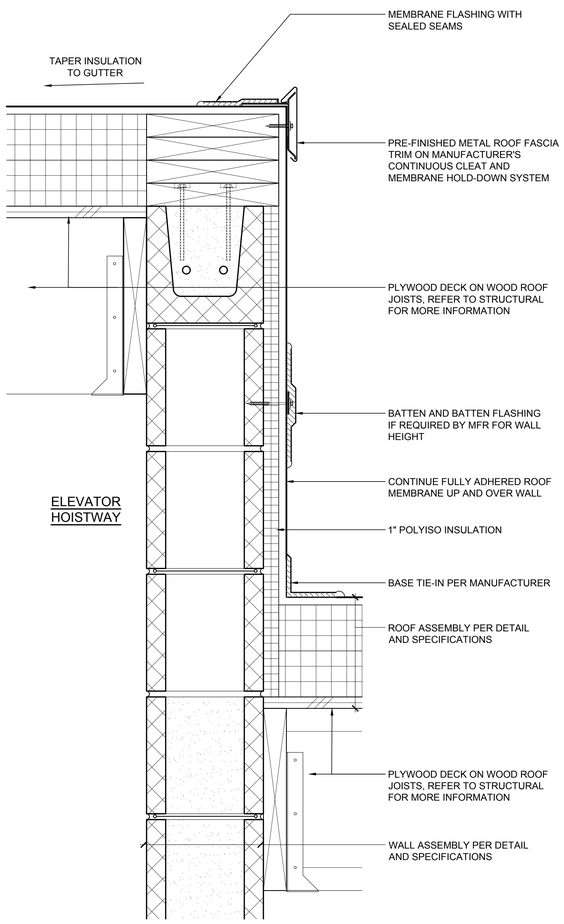

5 ELEVATOR PENTHOUSE ROOF EDGE DETAIL
SCALE: 3"=1'-0"

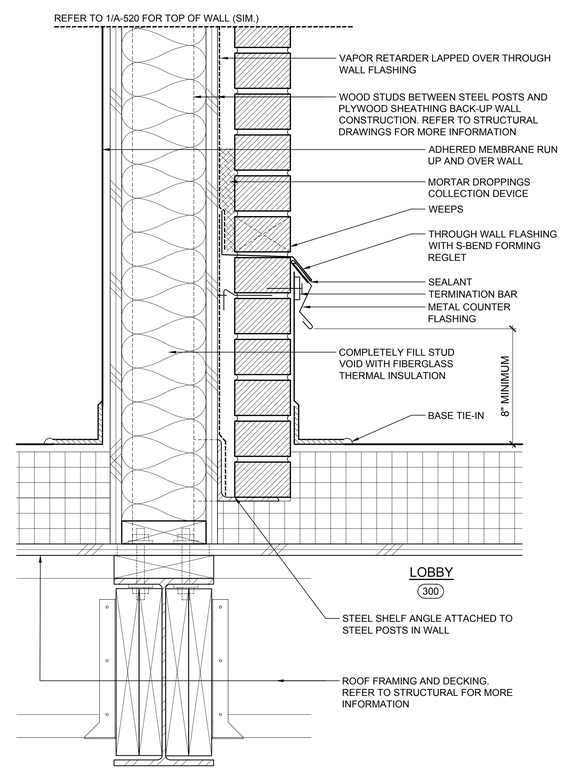

3 WING WALL AT ROOF DETAIL
SCALE: 3"=1'-0"

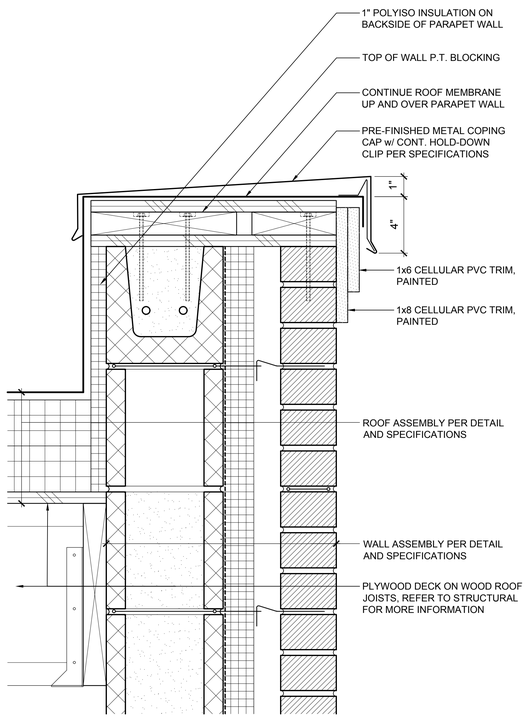

1 TYPICAL ROOF PARAPET DETAIL
SCALE: 3"=1'-0"

THE ARCHITECTS
THE INTEGRITY, THE ABILITY, THE EXPERIENCE
THE ARCHITECTS
Robert B. Hunt, AIA
56 Arbor Street
Hartford, CT 06106
Tel: 860-232-2707

Crosskey Architects LLC
Architecture Preservation Interiors
750 Main Street, Hartford, CT 06103
T: (860)724-3000 F: (860)724-3013

CITIZEN'S BLOCK
28-34 PARK PLACE, VERNON CT
14 Park Place, Vernon CT 06066
Owner: Town of Vernon - Administration

NOT FOR CONSTRUCTION RELEASED FOR: BID

Drawn: PS
Issued: 03.17.2021
Status:

Revisions

NO	DATE	DESCRIPTION

A-520
ROOF DETAILS

Copyright © 2020

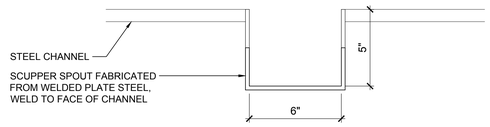

ELEVATION A

NOTES:

ALL STEEL COMPONENTS TO BE 316 STAINLESS STEEL, PROPERLY PREPARE, PRIME AND FINISH PAINT.

REFER TO STRUCTURAL FOR MORE INFORMATION ON CANOPY FRAMING.

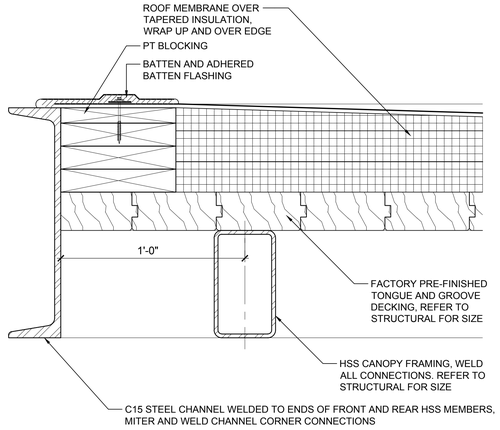

4 CANOPY SIDE EDGE DETAIL
SCALE: 3"=1'-0"

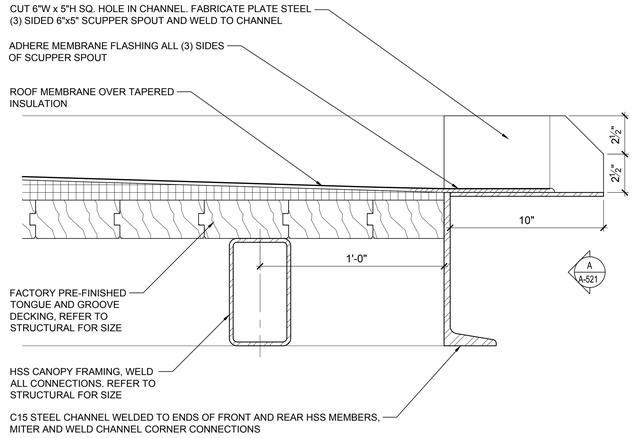

3 CANOPY SIDE EDGE DETAIL (SCUPPER SPOUT)
SCALE: 3"=1'-0"

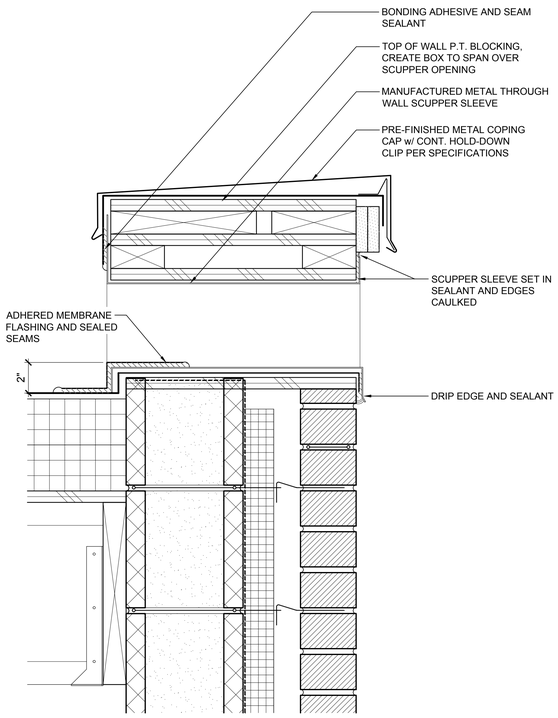

2 TYPICAL OVERFLOW DRAIN DETAIL
SCALE: 3"=1'-0"

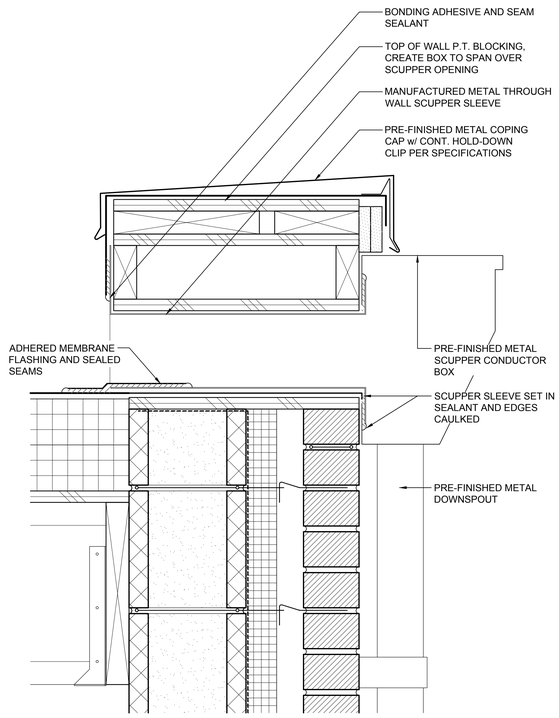

1 TYPICAL SCUPPER DRAIN DETAIL
SCALE: 3"=1'-0"

THE ARCHITECTS
THE INTEGRITY, THE ABILITY, THE EXPERIENCE
THE ARCHITECTS
Robert B. Hurd, AIA
56 Arbor Street
Hartford, CT 06106
Tel: 860-232-2707

Crosskey Architects LLC
Architecture Preservation Interiors
750 Main Street, Hartford, CT 06103
T: (860)724-3000 F: (860)724-3013

CITIZEN'S BLOCK
28-34 PARK PLACE, VERNON CT
14 Park Place, Vernon CT 06066

Owner: Town of Vernon - Administration

NOT FOR CONSTRUCTION RELEASED FOR: BID

Drawn: PS
Issued: 03.17.2021
Status:

Revisions

NO	DATE	DESCRIPTION

A-521
ROOF DETAILS

Copyright © 2020

DOOR SCHEDULE

DOORS							FRAMES						HARDWARE					REMARKS
No.	ROOM / LOCATION	SIZE	TYPE	MAT.	FIN.	ELEV.	ELEV.	MAT.	FIN.	JAMB	HEAD	SILL	FUNCTION	SET No.	KICK PLATE	CARD READER	RATING	
BASEMENT FLOOR																		
S1-0	STAIR #1	3'-0" x 7'-0" x 1 3/4"	SWING	HM	PT	D1	F2	HM	PT	2/A-611	3/A-611	-	STOREROOM	-	(2) 12"		1 1/2 HR	PROVIDE 12" HIGH KICK PLATE EACH SIDE OF DOOR. COORDINATE KEYING WITH OWNER
S2-0	STAIR #2	3'-0" x 7'-0" x 1 3/4"	SWING	HM	PT	D1	F2	HM	PT	2/A-611	3/A-611	-	STOREROOM	-	(2) 12"		1 1/2 HR	PROVIDE 12" HIGH KICK PLATE EACH SIDE OF DOOR. COORDINATE KEYING WITH OWNER
GROUND FLOOR																		
100	VESTIBULE 100	(2) 3'-0" x 7'-0"	SWING	ALUM	FF	SD-1	SF-1	ALUM	FF	11/A-611 12/A-611	8/A-611 9/A-611	7/A-611 10/A-611	ENTRY	-				INSULATED ALUMINUM STOREFRONT ENTRANCE SYSTEM. KAWNEER 500T UNSULPOUR IN TRIFAB 451 FRAMING SYSTEM
S1-1	STAIR #1	3'-0" x 7'-0" x 1 3/4"	SWING	-	-	-	F2	HM	PT	2/A-611	3/A-611	1/A-611	PASSAGE	-			1 1/2 HR	FURNISH AND INSTALL HOLLOW METAL FRAME ONLY
S1-E	STAIR #1 TO EXTERIOR	3'-0" x 7'-0" x 1 3/4"	SWING	IGHM	PT	D1	F2	GHM	PT	5/A-611	6/A-611	4/A-611	EXIT ONLY	-	(1) 12"			PROVIDE 12" HIGH KICK PLATE ON PUSH SIDE OF DOOR
SECOND FLOOR																		
S1-2	STAIR #1	3'-0" x 7'-0" x 1 3/4"	SWING	-	-	-	F2	HM	PT	2/A-611	3/A-611	1/A-611	PASSAGE	-			1 1/2 HR	FURNISH AND INSTALL HOLLOW METAL FRAME ONLY
S2-2	STAIR #2	3'-0" x 7'-0" x 1 3/4"	SWING	-	-	-	F2	HM	PT	2/A-611	3/A-611	1/A-611	PASSAGE	-			1 1/2 HR	FURNISH AND INSTALL HOLLOW METAL FRAME ONLY
										2/A-611	3/A-611	1/A-611						
THIRD FLOOR																		
S1-3	STAIR #1	3'-0" x 7'-0" x 1 3/4"	SWING	-	-	-	F2	HM	PT	2/A-611	3/A-611	1/A-611	PASSAGE	-			1 1/2 HR	FURNISH AND INSTALL HOLLOW METAL FRAME ONLY
S2-3A	STAIR #2	3'-0" x 7'-0" x 1 3/4"	SWING	-	-	-	F2	HM	PT	2/A-611	3/A-611	1/A-611	PASSAGE	-			1 1/2 HR	FURNISH AND INSTALL HOLLOW METAL FRAME ONLY
S2-3B	STAIR #2	3'-0" x 7'-0" x 1 3/4"	SWING	-	-	-	F2	HM	PT	2/A-611	3/A-611	1/A-611	PASSAGE	-			1 1/2 HR	FURNISH AND INSTALL HOLLOW METAL FRAME ONLY

WINDOW SCHEDULE

No.	M.O. DIMENSION	MANUFACTURER	MODEL	TYPE	FRAME MATERIAL	HEAD	JAMB	SILL	RATING	REMARKS
W1	2'-8" x 6'-0 3/8"	MARVIN	CLAD ULTIMATE DH - G2	DOUBLE HUNG	ALUM CLAD WOOD	3/A-612	5/A-612	1/A-612	--	EXTERIOR INSULATED ALUMINUM CLAD WOOD WINDOW.
W2	7'-4" x 8'-0 3/8" V.I.F.	MARVIN	CLAD ULTIMATE DH - G2	DOUBLE HUNG	ALUM CLAD WOOD	3/A-6XX	4/A-612 5/A-612	1/A-612	--	EXTERIOR INSULATED ALUMINUM CLAD WOOD WINDOW. FIELD VERIFY HEIGHT WITH EXIST SECOND FLOOR WINDOWS
W3	7'-4" x 7'-1 3/4" V.I.F.	MARVIN	CLAD ULTIMATE DH - G2	DOUBLE HUNG	ALUM CLAD WOOD	6/A-6XX	4/A-612 5/A-612	1/A-612	--	EXTERIOR INSULATED ALUMINUM CLAD WOOD WINDOW. FIELD VERIFY HEIGHT WITH EXIST THIRD FLOOR WINDOWS
W4	3'-0" x 8'-0" V.I.F.	MARVIN	CLAD ULTIMATE DH - G2	DOUBLE HUNG	ALUM CLAD WOOD	9/A-612	8/A-612	7/A-612	--	EXTERIOR INSULATED ALUMINUM CLAD WOOD WINDOW. FIELD VERIFY EXISTING OPENING DIMENSIONS
W5	3'-0" x 7'-0" V.I.F.	MARVIN	CLAD ULTIMATE DH - G2	DOUBLE HUNG	ALUM CLAD WOOD	9/A-612	8/A-612	7/A-612	--	EXTERIOR INSULATED ALUMINUM CLAD WOOD WINDOW. FIELD VERIFY EXISTING OPENING DIMENSIONS

GLASS TYPE SCHEDULE (REFER TO SPECIFICATIONS FOR MORE INFORMATION)

	GLASS	COATING	TINT	REMARKS
A	1/4" ANNEALED	-		INTERIOR LOCATIONS WHERE INDICATED ON ELEVATIONS
B	1/4" TEMPERED	-		INTERIOR LOCATIONS WHERE INDICATED ON ELEVATIONS, OR NOTED IN GENERAL NOTES
C	7/8" INSULATED	LOW-E		EXTERIOR HUNG WINDOW LOCATIONS WHERE INDICATED ON ELEVATIONS
D	1" INSULATED	LOW-E		EXTERIOR STOREFRONT LOCATIONS WHERE INDICATED ON ELEVATIONS
E	1" INSULATED TEMPERED	LOW-E		EXTERIOR STOREFRONT LOCATIONS WHERE INDICATED ON ELEVATIONS, OR NOTED IN GENERAL NOTES
F	FIRE PROTECTION RATED FIRE RESISTIVE RATED	-		FIRE RATED DOORS, WINDOWS AND STOREFRONTS. HOURLY RATING PER SCHEDULE, GLASS MATERIAL TYPE AS REQUIRED PER OPENING SIZE AND RATING

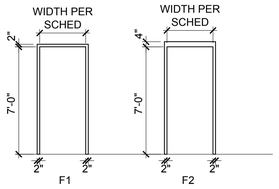

HOLLOW METAL DOOR FRAME ELEVATIONS

SCALE: 1/4"=1'-0"

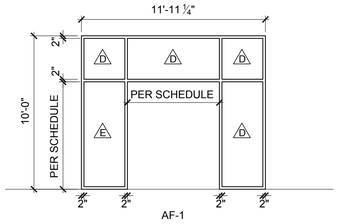

STOREFRONT FRAME ELEVATIONS

SCALE: 1/4"=1'-0"

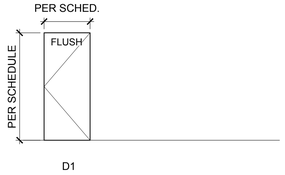

HM DOOR ELEVATIONS

SCALE: 1/4"=1'-0"

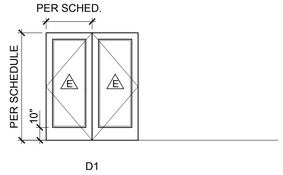

STOREFRONT DOOR ELEVATIONS

SCALE: 1/4"=1'-0"

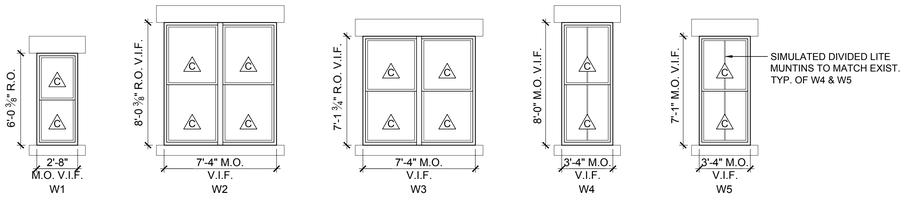

WINDOW ELEVATIONS

SCALE: 1/4"=1'-0"

DOOR GENERAL NOTES

1. FIELD VERIFY ALL DOOR DIMENSIONS FOR DOORS IN EXISTING OPENINGS.
2. CONTRACTOR TO COORDINATE ALL ROUGH OPENING SIZES IN NEW OR EXISTING WALLS TO ACCOMMODATE DOORS AND FRAMES AS SCHEDULED.
3. CONTRACTOR SHALL MODIFY EXISTING MASONRY DOOR OPENINGS AS NECESSARY TO ACCOMMODATE FOR NEW DOORS AND FRAMES AS SCHEDULED.
4. PROVIDE NEW MASONRY OPENINGS IN EXISTING WALLS AS REQUIRED TO RECEIVE NEW DOORS AND FRAMES. REFER TO STRUCTURAL FOR NEW LINTEL INFORMATION.
5. REFER TO SPECIFICATIONS FOR HARDWARE. ALL NEW DOOR LATCHES SHALL BE THE LEVER TYPE.
6. OPERATING FORCE TO OPEN DOORS SHALL NOT EXCEED 5 POUNDS.
7. ALL DOOR OPERATING HARDWARE SHALL BE MOUNTED WITHIN 48" ABOVE FINISH FLOOR.
8. PROVIDE DOOR SILENCERS AT ALL H.M. DOOR FRAMES NOT RECEIVING WEATHER STRIPPING.
9. PROVIDE KICK PLATES ON PUSH SIDE ONLY FOR ALL DOORS SCHEDULED TO RECEIVE KICK PLATES, UNLESS NOTED OTHERWISE.
10. PROVIDE WEATHER-STRIPPING AND THRESHOLDS AT ALL EXTERIOR DOORS.
11. ALL DOOR THRESHOLDS SHALL BE HANDICAP ACCESSIBLE WITH A 1/2" MAXIMUM RISE AND A 1:2 SLOPED BEVEL.
12. CONTRACTOR SHALL COORDINATE ELECTRICAL/ LOW VOLTAGE REQUIREMENTS FOR DOORS SPECIFIED TO RECEIVE ELECTRIFIED HARDWARE OR SECURITY REQUIREMENTS.
13. COORDINATE ALL HARDWARE WITH OWNER. CONTRACTOR SHALL REVIEW AND VERIFY ALL HARDWARE FUNCTIONS WITH THE OWNER PRIOR TO PLACING ORDER. CONTRACTOR TO COORDINATE KEYING WITH OWNER.
14. ALL PAINTED HOLLOW METAL DOORS SHALL HAVE A FACTORY APPLIED PRIMER. FINISH COLOR TO BE SELECTED BY ARCHITECT. ALL WOOD DOORS TO HAVE A FACTORY APPLIED STAIN AND CLEAR COAT OR FACTORY APPLIED PRIMER. FINISH STAIN AND PAINT COLOR TO BE SELECTED BY ARCHITECT.
15. ALL GLAZING WITHIN DOORS OR SIDELITES SHALL BE TEMPERED SAFTEY GLASS. REFER TO GLAZING SCHEDULE FOR TYPES.
16. REFER TO SIGNAGE SCHEDULE FOR SIGNS AT DOOR LOCATIONS.

DOOR LEGEND

ALUM	ALUMINUM
ETR	EXISTING TO REMAIN
FF	FACTORY FINISH
GHM	GALVANIZED HOLLOW METAL
HC	HOLLOW CORE
HM	HOLLOW METAL
IGHM	INSULATED GALVANIZED HOLLOW METAL
PT	PAINT
SC	SOLID CORE
WD	WOOD

WINDOW GENERAL NOTES

1. WINDOW SCHEDULE DOES NOT INDICATE QUANTITIES OF WINDOWS. G.C. SHALL BE RESPONSIBLE FOR CALCULATING QUANTITIES.
2. ALL NEW WINDOWS SHALL BE THE SAME MANUFACTURER AND MODEL OF THE PREVIOUSLY INSTALLED REPLACEMENT WINDOWS. EXTERIOR CASING PROFILE AND ALUMINUM CLAD COLOR SHALL MATCH. GLAZING SHALL MATCH. BASIS OF DESIGN: MARVIN CLAD ULTIMATE DOUBLE HUNG NEXT GENERATION G2.
3. PROVIDE SHOP DRAWINGS SHOWING ALL WINDOW AND INSTALLATION DETAILS FOR ARCHITECT'S REVIEW AND APPROVAL.
4. MASONRY OPENINGS MAY VARY. FIELD VERIFY ALL MASONRY OPENINGS PRIOR TO ORDERING WINDOWS. SHOP DRAWINGS SHALL INDICATE FIELD MEASUREMENTS.
5. ALL OPERABLE WINDOWS THAT HAVE A SILL HEIGHT LESS THAN 36" ABOVE THE FLOOR AND ARE GREATER THAN 72" ABOVE THE EXTERIOR SURFACE SHALL BE EQUIPPED WITH OPENING LIMITERS THAT PREVENT THE PASSAGE OF A 4" SPHERE.
6. ALL EXTERIOR WINDOW ASSEMBLIES SHALL BE DESIGNED, DETAILED, AND INSTALLED TO RESIST WIND LOADS IN ACCORDANCE WITH THE CONNECTICUT STATE BUILDING CODE.

STOREFRONT GENERAL NOTES

1. PROVIDE SHOP DRAWINGS SHOWING ALL WINDOW AND INSTALLATION DETAILS FOR ARCHITECT'S REVIEW AND APPROVAL.
2. FIELD VERIFY DIMENSIONS OF ALL OPENINGS PRIOR TO SUBMISSION OF SHOP DRAWINGS AND FABRICATION. SHOP DRAWINGS SHALL INDICATE FIELD MEASUREMENTS.
3. ALL EXTERIOR STOREFRONT ASSEMBLIES SHALL BE DESIGNED, DETAILED, AND INSTALLED TO RESIST WIND LOADS IN ACCORDANCE WITH THE CONNECTICUT STATE BUILDING CODE.
4. ALL STOREFRONT FRAMES SHALL BE MANUFACTURER FACTORY PRE-FINISHED. REFER TO SPECIFICATIONS FOR FINISH.

GLAZING GENERAL NOTES

1. REFER TO GLAZING SCHEDULE FOR GLASS TYPES.
2. ALL TEMPERED GLASS SHALL HAVE A NONREMOVAL LABEL BY THE MANUFACTURER. TEMPERED SAFTEY GLASS SHALL BE USED IN THE FOLLOWING LOCATIONS:

   DOORS: ALL GLASS WITHIN A DOOR. ALL UNITS WITHIN 24" OF A VERTICAL EDGE OF A DOOR TO A MINIMUM HEIGHT TO 60" ABOVE THE FINISHED WALKING SURFACE.

   WINDOWS: GLASS IN WINDOWS AND STOREFRONTS SHALL BE TEMPERED WHERE ALL OF THE FOLLOW CRITERIA EXIST. THE INDIVUAL PANE IS GREATER THE 9 SF, THE BOTTOM EDGE IS LESS THAN 18" ABOVE THE FLOOR, THE TOP EDGE IS GREATER THAN 36" ABOVE THE FLOOR, AND A WALKING SURFACE IS WITHIN 36" OF THE GLAZING.

   STAIRS: GLASS ADJACENT TO STAIRS SHALL BE TEMPERED WHERE ANY OF THE FOLLOWING CONDITIONS EXIST. THE BOTTOM OF THE GLAZING IS LESS THAN 60" ABOVE, AND WITHIN 36" OF THE WALKING SURFACE OF A STAIR RUN /LANDING OR 60" FROM THE BOTTOM TREAD.

   WET AREAS: SHOWER DOORS AND BATHROOM MIRRORS.

THE ARCHITECTS
THE INTEGRITY, THE ABILITY, THE EXPERIENCE
THE ARCHITECTS
Robert B. Hunt, AIA
56 Arbor Street
Hartford, CT 06106
Tel: 860-232-2707

Crosskey Architects LLC
Architecture Preservation Interiors
750 Main Street, Hartford, CT 06103
T: (860)724-3000 F: (860)724-3013

CITIZEN'S BLOCK

28-34 PARK PLACE, VERNON CT

Owner: Town of Vernon - Administration

14 Park Place, Vernon CT 06066

NOT FOR CONSTRUCTION RELEASED FOR: BID

Drawn: PS
Issued: 03.17.2021
Status:

Revisions

NO	DATE	DESCRIPTION

A-610

DOOR AND WINDOW SCHEDULES AND ELEVATIONS

Copyright © 2020

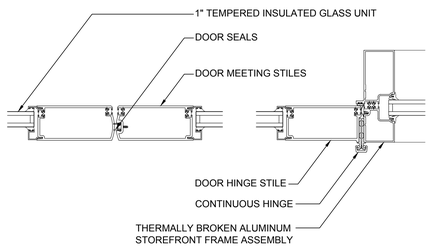

12 SECTION DETAIL
SCALE: 3"=1'-0"

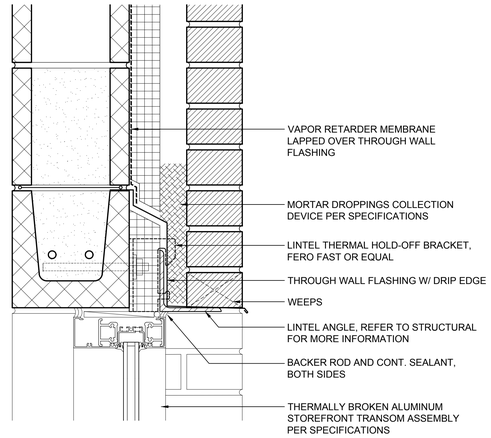

9 STOREFRONT TRANSOM HEAD DETAIL
SCALE: 3"=1'-0"

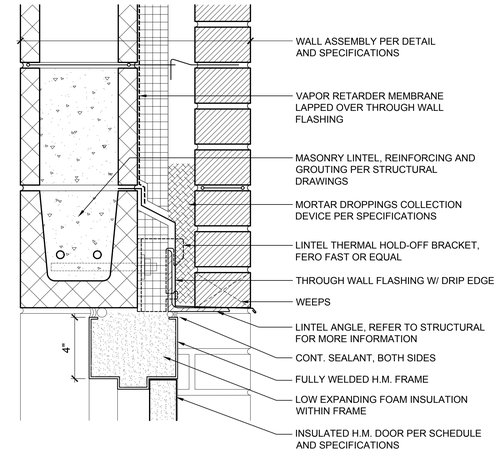

6 H.M. HEAD DETAIL (EXTERIOR)
SCALE: 3"=1'-0"

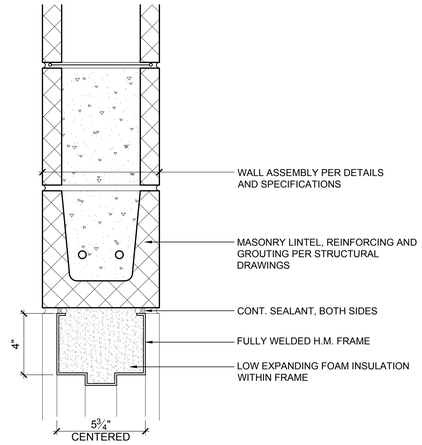

3 H.M. HEAD DETAIL (INTERIOR)
SCALE: 3"=1'-0"

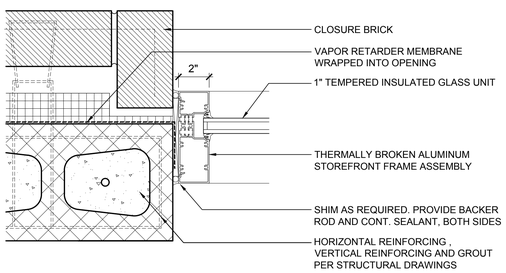

11 STOREFRONT SIDELITE JAMB DETAIL
SCALE: 3"=1'-0"

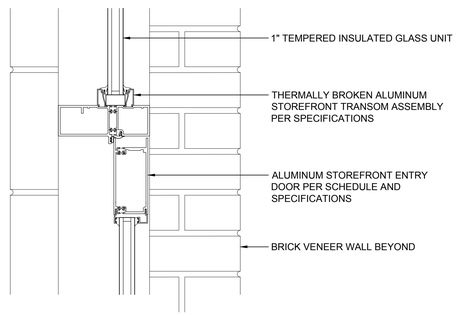

8 STOREFRONT DOOR HEAD DETAIL
SCALE: 3"=1'-0"

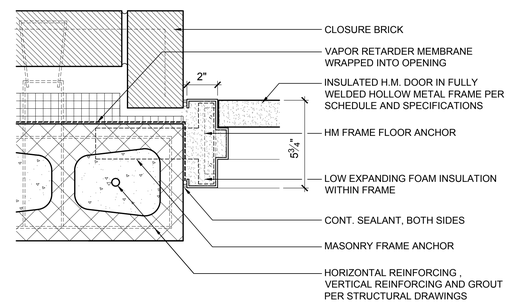

5 H.M. JAMB DETAIL (EXTERIOR)
SCALE: 3"=1'-0"

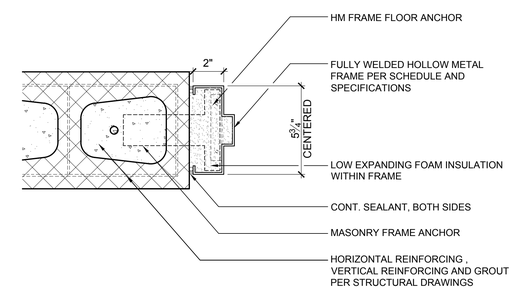

2 H.M. JAMB DETAIL (INTERIOR)
SCALE: 3"=1'-0"

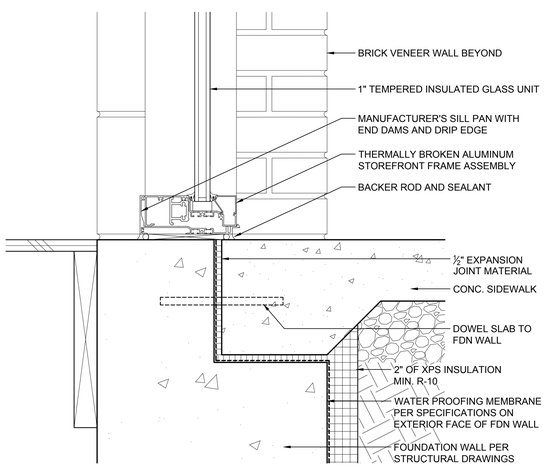

10 STOREFRONT SIDELITE SILL DETAIL
SCALE: 3"=1'-0"

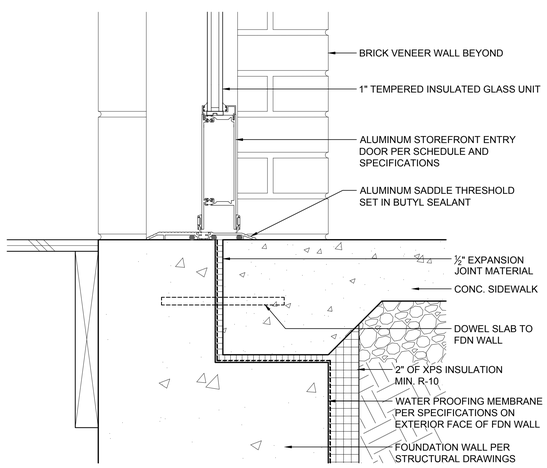

7 STOREFRONT DOOR SILL DETAIL
SCALE: 3"=1'-0"

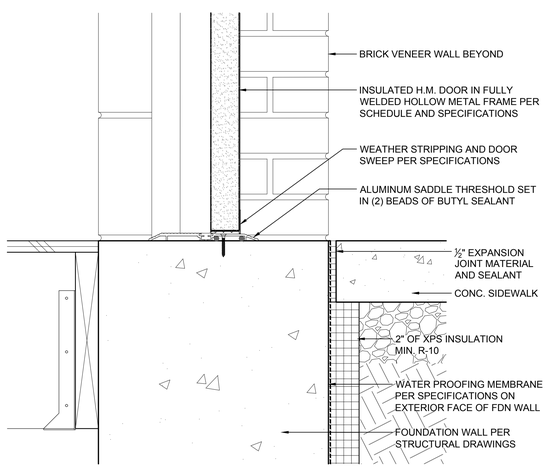

4 H.M. SILL DETAIL (EXTERIOR)
SCALE: 3"=1'-0"

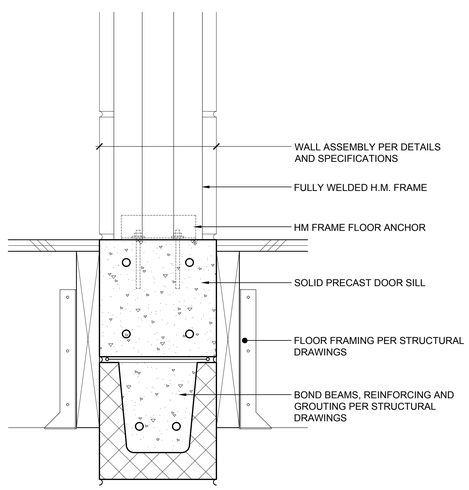

1 H.M. SILL DETAIL (INTERIOR)
SCALE: 3"=1'-0"

THE ARCHITECTS
THE INTEGRITY, THE ABILITY, THE EXPERIENCE
THE ARCHITECTS
Robert B. Hurd, AIA
54 Arbor Street
Hartford, CT 06106
Tel: 860-232-2707

Crosskey Architects LLC
Architecture Preservation Interiors
750 Main Street, Hartford, CT 06103
T: (860)724-3000 F: (860)724-3013

CITIZEN'S BLOCK
28-34 PARK PLACE, VERNON CT
14 Park Place, Vernon CT 06066
Owner: Town of Vernon - Administration

NOT FOR CONSTRUCTION RELEASED FOR: BID

Drawn: PS
Issued: 03.17.2021
Status:

Revisions

NO	DATE	DESCRIPTION

A-611
DOOR DETAILS

Copyright © 2020

NOTE:
INTERIOR CASINGS AND TRIM
INSTALLED IN FUTURE PHASE

WINDOW, TRIM AND INSTALLATION TO
MATCH EXISTING REPLACEMENT
WINDOWS

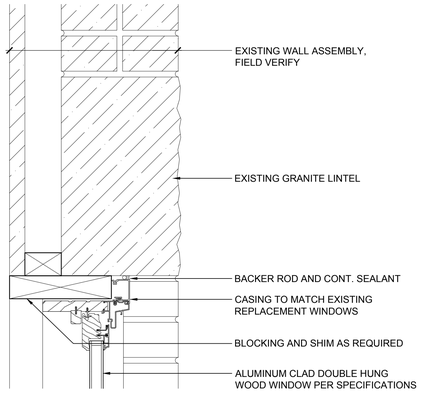

9 WINDOW HEAD DETAIL
SCALE: 3"=1'-0"

NOTE:
INTERIOR CASINGS AND TRIM
INSTALLED IN FUTURE PHASE

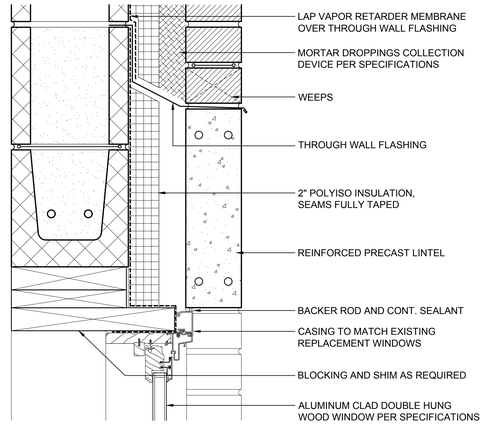

6 WINDOW HEAD DETAIL
SCALE: 3"=1'-0"

NOTE:
INTERIOR CASINGS AND TRIM
INSTALLED IN FUTURE PHASE

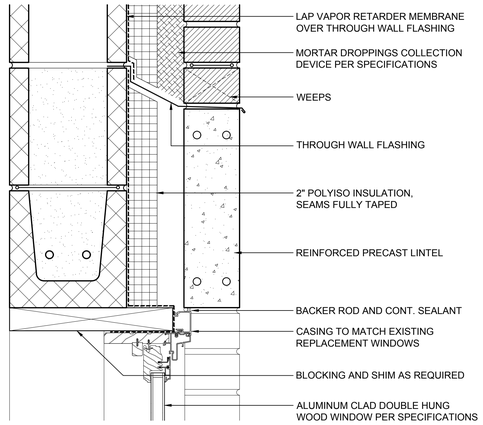

3 WINDOW HEAD DETAIL
SCALE: 3"=1'-0"

NOTE:
INTERIOR CASINGS AND TRIM
INSTALLED IN FUTURE PHASE

WINDOW, TRIM, AND INSTALLATION
TO MATCH EXISTING REPLACEMENT
WINDOWS

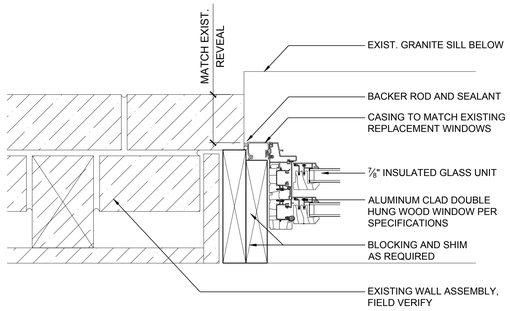

8 WINDOW JAMB DETAIL
SCALE: 3"=1'-0"

NOTE:
INTERIOR CASINGS AND TRIM
INSTALLED IN FUTURE PHASE

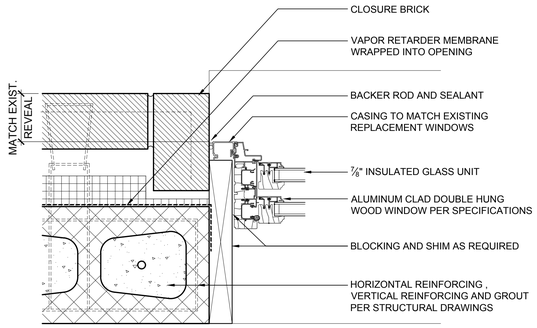

5 WINDOW JAMB DETAIL
SCALE: 3"=1'-0"

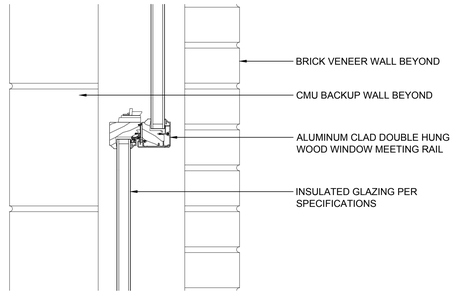

2 WINDOW MEETING RAIL DETAIL
SCALE: 3"=1'-0"

NOTE:
INTERIOR CASINGS AND TRIM
INSTALLED IN FUTURE PHASE

WINDOW, TRIM AND INSTALLATION TO
MATCH EXISTING REPLACEMENT
WINDOWS

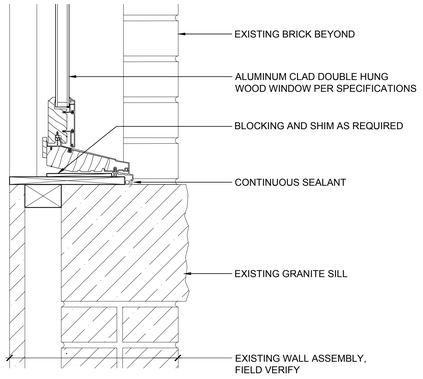

7 WINDOW SILL DETAIL
SCALE: 3"=1'-0"

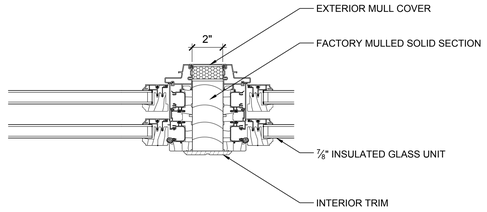

4 WINDOW MULLION DETAIL
SCALE: 3"=1'-0"

NOTE:
INTERIOR CASINGS AND TRIM
INSTALLED IN FUTURE PHASE

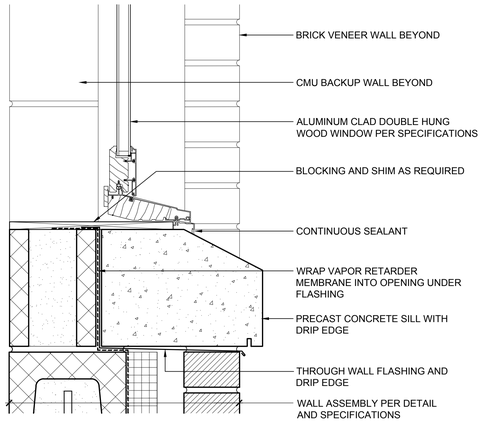

1 WINDOW SILL DETAIL
SCALE: 3"=1'-0"

THE ARCHITECTS
THE INTEGRITY, THE ABILITY, THE EXPERIENCE
THE ARCHITECTS
Robert B. Hurd, AIA
54 Arbor Street
Hartford, CT 06106
Tel: 860-232-2707

Crosskey Architects LLC
Architecture Preservation Interiors
750 Main Street, Hartford, CT 06103
T: (860)724-3000 F: (860)724-3013

CITIZEN'S BLOCK
28-34 PARK PLACE, VERNON CT
14 Park Place, Vernon CT 06066
Owner: Town of Vernon - Administration

NOT FOR CONSTRUCTION RELEASED FOR: BID

Drawn: PS
Issued: 03.17.2021
Status:

Revisions

NO	DATE	DESCRIPTION

A-612
WINDOW DETAILS

Copyright © 2020