INTERMEDIATE RIPRAP:

STONE SIZE	PERCENTAGE OF THE MASS
18" OR OVER	0
10" TO 18"	30–50
6" TO 10"	30–50
4" TO 6"	20–30
2" TO 4"	10–20
LESS THAN 2"	0–10

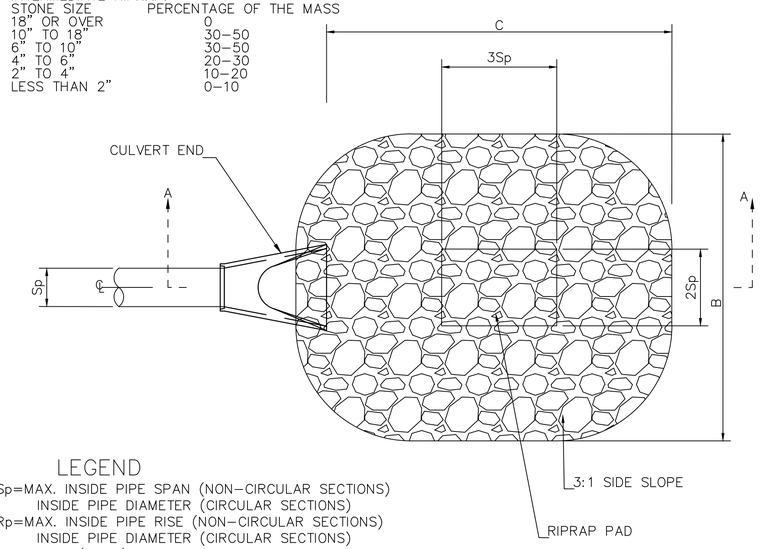

LEGEND

Sp=MAX. INSIDE PIPE SPAN (NON–CIRCULAR SECTIONS)
INSIDE PIPE DIAMETER (CIRCULAR SECTIONS)
Rp=MAX. INSIDE PIPE RISE (NON–CIRCULAR SECTIONS)
INSIDE PIPE DIAMETER (CIRCULAR SECTIONS)
d=300 MM (12 IN) MODIFIED RIPRAP
450 MM (18 IN) INTERMEDIATE RIPRAP
900 MM (36 IN) STANDARD RIPRAP
TYPE 1 F=0.5 Rp
TYPE 2 F=Rp
C=3Sp+6F
B=2Sp+6F

PLAN VIEW

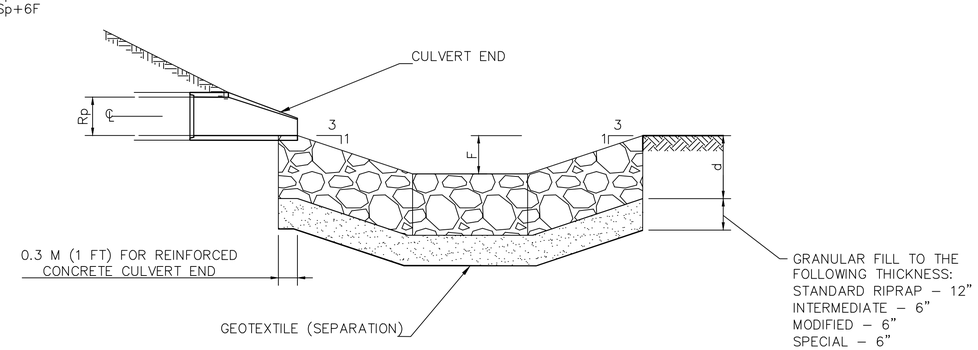

SECTION A-A

PREFORMED SCOUR HOLE TYPE 1 AND TYPE 2

N.T.S.

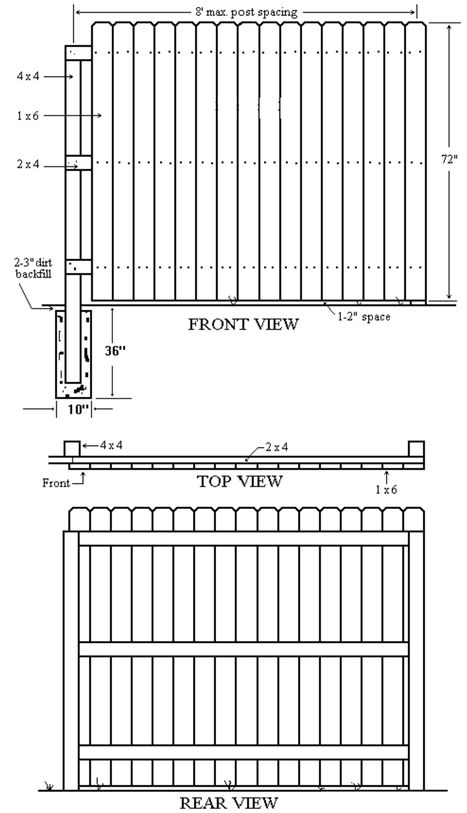

6' STOCKADE FENCE

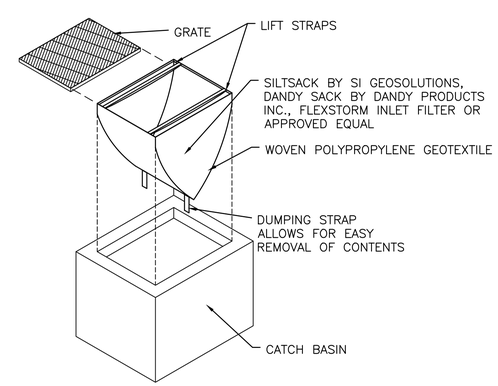

USE SILT SACK ON PAVED AREAS

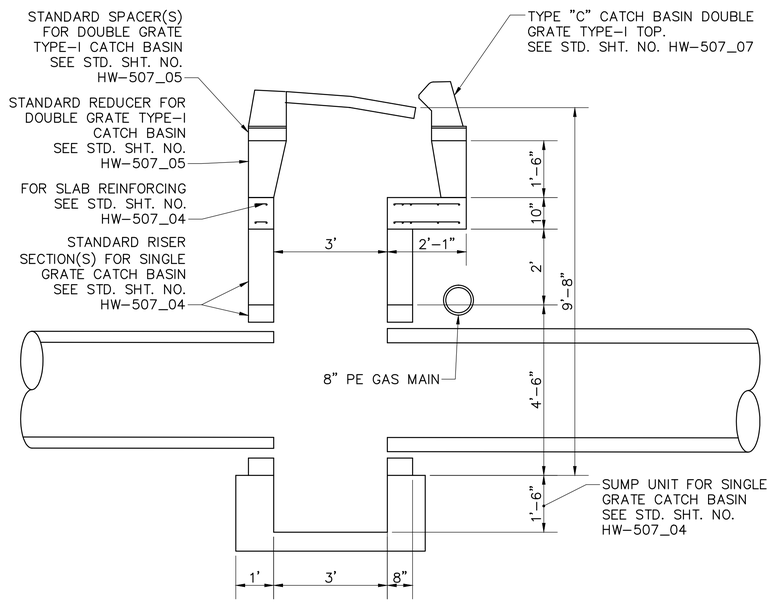

TYPE "C" CATCH BASIN DOUBLE GRATE TYPE-I (MODIFIED)

NOT TO SCALE

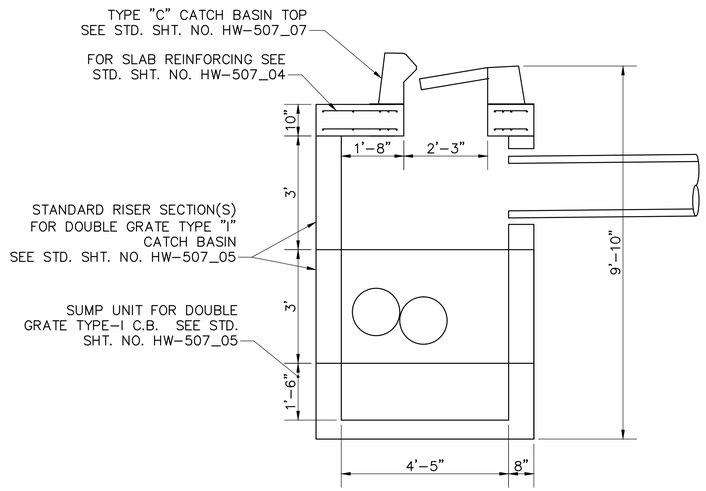

TYPE "C" CATCH BASIN (MODIFIED)

NOT TO SCALE

REV.	DATE	REVISION DESCRIPTION	SHEET NO.
-	-	-	-
-	-	-	-
-	-	-	-
-	-	-	-
-	-	-	-
-	-	-	-

THE INFORMATION, INCLUDING ESTIMATED QUANTITIES OF WORK, SHOWN ON THESE SHEETS IS BASED ON LIMITED INVESTIGATIONS BY THE STATE AND IS IN NO WAY WARRANTED TO INDICATE THE CONDITIONS OF ACTUAL QUANTITIES OF WORK WHICH WILL BE REQUIRED.

Plotted: JULY 19, 2016

DESIGNER/DRAFTER: AD
CHECKED BY: ME

CARDINAL ENGINEERING ASSOCIATES
3 Colony Street | Meriden, CT 06451 | 203-238-1969
Filename: P:\Civ3dProj2014\VernonSouthSt64\Prodwg\MDS 01.dwg

SIGNATURE/ BLOCK: - -

PROJECT TITLE: RECONSTRUCTION OF SOUTH STREET

TOWN: VERNON

DRAWING TITLE: MISCELLANEOUS DETAILS

PROJECT NO. 146-195
DRAWING NO. MDS 01
SHEET NO. 03 07

P:\Civil 3d Projects 2014\Vernon South St64\Production Drawings\mds-01.dwg, 03 07, 7/19/2016 2:17:06 PM,
DWG To PDF.pc3, ANSI full bleed D (34.00 x 22.00 Inches)

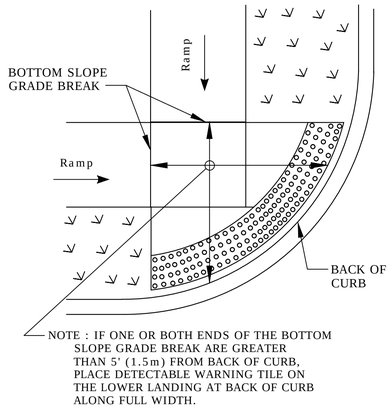

DETECTABLE WARNING PLACEMENT DETAIL 1

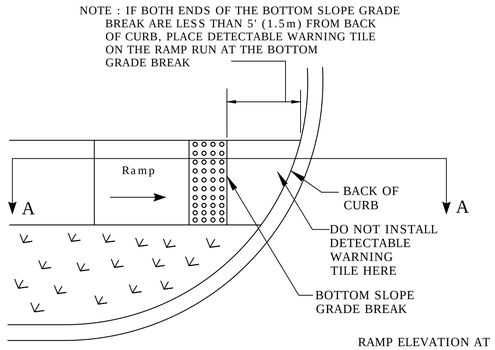

DETECTABLE WARNING PLACEMENT DETAIL 2

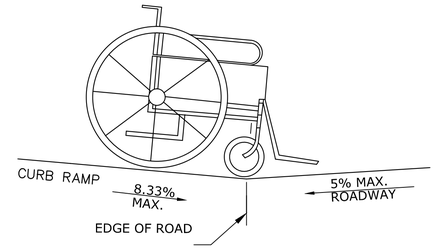

DETAIL 1
SEE GRADE CHANGE AT ROADWAY INTERFACE

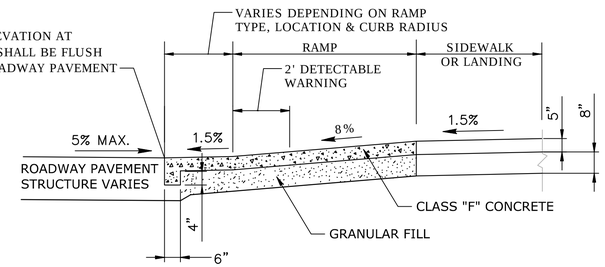

TYPICAL SECTION A-A THRU SIDEWALK RAMP
SEE NOTE 2 AND 17 ON THIS SHEET

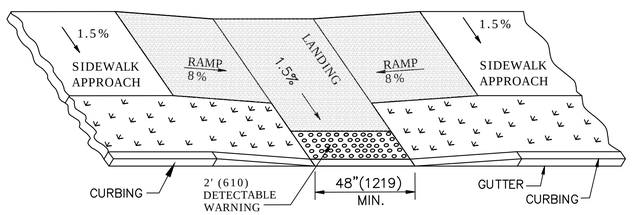

PARALLEL SIDEWALK RAMP (TYPE 1a)
WITH UTILITY / GRASS STRIP

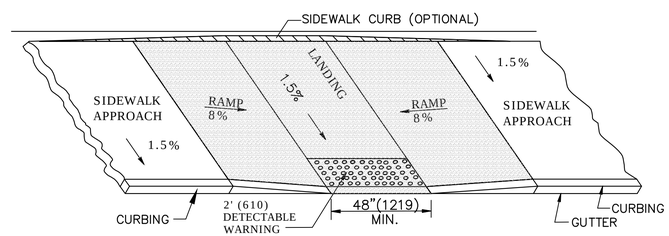

PARALLEL SIDEWALK RAMP (TYPE 1) NO UTILITY STRIP

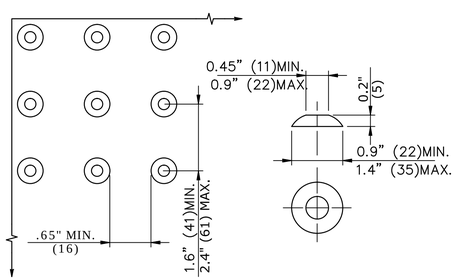

DOME SPACING DOME SECTION

STANDARD DOME ON DETECTABLE WARNING TILES

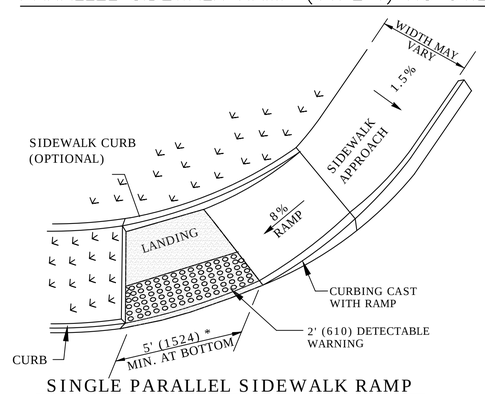

SINGLE PARALLEL SIDEWALK RAMP
W/LANDING AT BOTTOM ON
CORNER (TYPE 4c)
* SEE NOTE 20

HANDICAPPED RAMP NOTES:

1. MAXIMUM SLOPES OF ADJOINING GUTTERS AND ROAD SURFACES IMMEDIATELY ADJACENT TO THE SIDEWALK RAMP OR PEDESTRIAN ACCESS ROUTE SHOULD NOT EXCEED 5%. THE MAXIMUM GRADE DIFFERENCE BETWEEN THE GUTTER AND CURB RAMP SHALL NOT EXCEED 13%. SEE DETAIL 1 ON THIS SHEET.
2. RAMP GRADE SHALL BE UNIFORM, FREE OF SAGS AND ABRUPT GRADE CHANGES. RUNNING SLOPES OF RAMPS SHALL NOT EXCEED 8.3%.
3. ALL RAMPS SHALL BE CONSTRUCTED OF CLASS "F" CONCRETE IN ACCORDANCE WITH CONNECTICUT STANDARD SPECIFICATIONS.
4. SIDEWALK RAMPS SHALL HAVE A COARSE BROOM FINISH TRANSVERSE TO THE SLOPE OF THE RAMP. THE SURFACE OF ALL SIDEWALK RAMPS SHALL BE STABLE, FIRM AND SLIP RESISTANT. SURFACE DISCONTINUITIES SHALL NOT EXCEED½" (13) MAXIMUM. VERTICAL DISCONTINUITIES BETWEEN ¼" (6.4) AND ½" (13) MAX. SHALL BE BEVELED 1:2 MINIMUM APPLIED ACROSS THE ENTIRE LEVEL CHANGE.
5. DIAGONAL SIDEWALK RAMPS AT MARKED CROSSINGS SHALL BE WHOLLY CONTAINED WITHIN THE MARKINGS, EXCLUDING ANY FLARED SIDES. DIAGONAL AND PERPENDICULAR RAMPS SHALL HAVE THE RAMP CUT PERPENDICULAR TO THE TANGENT OF THE CURB RADIUS FOR THE DESIGNATED ACCESSIBLE ROUTE. BOTH LONGITUDINAL SIDES OF THE RAMP SHOULD BE THE SAME LENGTH. SKEWED RAMPS SHOULD BE AVOIDED. FLARES ARE NOT CONSIDERED PART OF PEDESTRIAN ACCESS ROUTE.
6. REMOVAL OF EXISTING SIDEWALK FOR NEW RAMP INSTALLATIONS SHALL BE TO THE NEAREST EXPANSION OR CONTRACTION JOINT. 8.3% MAXIMUM SLOPE MAY NOT BE ACHIEVABLE DUE TO SIDEWALK GRADE. IN RECOGNITION OF THIS, A LIMIT OF 15' (4572) FOR REMOVAL SHALL BE USED UNLESS OTHERWISE SHOWN ON THE PLANS. SAW CUT REQUIRED FOR DUMMY JOINTS SHALL BE INCLUDED IN THE COST OF "CONCRETE SIDEWALK".
7. EXPANSION JOINTS IN CONCRETE SHALL MATCH THOSE IN ADJACENT SIDEWALKS BUT IN NO CASE SHALL THE SPACING BETWEEN EXPANSION JOINTS EXCEED 12' (3658) UNLESS OTHERWISE NOTED.
8. SIDEWALK RAMPS, SHALL BE PAID FOR UNDER THE ITEM "CONCRETE SIDEWALK", INCLUDING DETECTABLE WARNING STRIP AND SIDEWALK CURBING AT THE BACK OF SIDEWALK.
9. SIDEWALK RAMPS SHALL BE CONSTRUCTED WITH THE TOE AT THE GUTTER CAST IN PLACE UNLESS DIRECTED OTHERWISE BY THE ENGINEER (SEE TYPICAL SECTION A-A). FLARES FOR PERPENDICULAR RAMPS UP TO THE GUTTER SHALL ALSO BE CAST IN PLACE. CURBING ADJACENT TO OR TRANSITIONING FROM RAMP OR FLARES MAY VARY. CURBING OUTSIDE LIMITS OF RAMP OR LANDING SHOWN ON SHEET 2 SHALL BE CONSTRUCTED AND PAID FOR IN ACCORDANCE WITH CONNECTICUT STANDARD SPECIFICATIONS.
10. PREFERED LOCATION TO INSTALL DETECTABLE WARNING STRIP SHALL BE 6" (152) FROM THE EDGE OF ROAD ALONG THE FULL WIDTH OF THE RAMP. FOR ALTERNATE LOCATIONS, REFER TO DETECTABLE WARNING PLACEMENT DETAILS 1 AND 2.
11. TO PERMIT WHEELCHAIR WHEELS TO ROLL BETWEEN DOMES, ALIGN DOMES ON A SQUARE GRID IN THE DIRECTION OF RUNNING SLOPE (PERPENDICULAR TO CURB OR SLOPE BREAK). THE TRANSITION FROM RAMP TO GUTTER SHALL BE FLUSH WITHOUT A LIP.
12. FOR SIDEWALKS CONTINUOUS THROUGH DRIVEWAYS, RAMPS AND DETECTABLE WARNING SURFACES ARE NOT REQUIRED.
13. CONSTRUCT A SIDEWALK CURB BEHIND THE SIDEWALK WHEN THERE IS INSUFFICIENT BUFFER AVAILABLE OR WHEN CALLED FOR IN PLANS. SIDEWALK CURB SHALL BE PAID FOR AS PART OF THE ITEM "CONCRETE SIDEWALK RAMP".
14. THE TOP AND BOTTOM OF RAMPS SHOULD BE PROVIDED WITH A 4' x 4' (1219 x 1219) MINIMUM LEVEL LANDING AREA WITH A CROSS SLOPE LESS THAN OR EQUAL TO 2% MAXIMUM IN ANY DIRECTION. DIAGONAL RAMPS SHOULD NOT BE INSTALLED WHERE CURB RADII IS LESS THAN 20'(6096).
15. UTILITY POLES, LUMINAIRES, PEDESTRIAN OR SIGNAL POLES, GRATES, ACCESS COVERS, AND OTHER APPURTENANCES SHALL NOT BE LOCATED ON RAMPS, LANDINGS, BLENDED TRANSITIONS, FLARES, AND @ GUTTERS WITHIN THE PEDESTRIAN ACCESS ROUTE.
16. APPROACH SIDEWALK WIDTHS, GRASS STRIP OR UTILITY STRIP WIDTHS MAY VARY.
17. APPROACH SIDEWALK AND LANDING CROSS SLOPE SHALL NOT EXCEED 2%.
18. THE RUNNING OR CROSS SLOPES ON LANDINGS AT MIDBLOCK CROSSING MAY BE WARPED TO MEET STREET OR HIGHWAY GRADE.
19. FOR PERPENDICULAR CURB RAMPS A MIN. 4'(1.2m) x 4'(1.2m) TURNING SPACE SHALL BE PROVIDED AT THE TOP OF CURB RAMP. WHERE THE TURNING SPACE IS RESTRICTED AT THE BACK OF SIDEWALK THE TURNING SPACE SHALL BE 4'(1.2m) x 5'(1.5m) WITH THE 5' (1.5m) DIMENSION PROVIDED IN THE DIRECTION OF THE RAMP RUN.
20. FOR PARALLEL CURB RAMPS, A MIN. 4'(1.2m) x 4' (1.2m) TURNING SPACE SHALL BE PROVIDED AT THE BOTTOM OF CURB RAMP. IF THE TURNING SPACE IS RESTRICTED ON 2 OR MORE SIDES, THE TURNING SPACE SHALL BE 4'(1.2m)x 5' (1.5m) WITH THE 5' (1.5m) DIMENSION PROVIDED IN THE DIRECTION OF THE PEDESTRIAN STREET CROSSING.

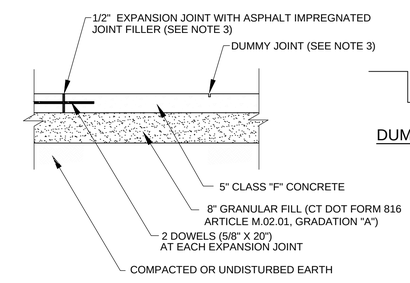

LONGITUDINAL SECTION

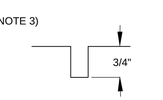

DUMMY JOINT

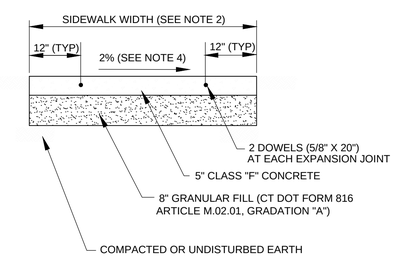

CROSS SECTION

NOTES:

1. ALL SIDEWALK SURFACES SHALL BE LIGHTLY BROOMED PERPENDICULAR TO THE LONGITUDINAL DIRECTION OR AS DIRECTED BY THE ENGINEER. THE OUTSIDE EDGES OF THE SLAB AND ALL JOINTS SHALL BE EDGED WITH A 1/4" RADIUS EDGING TOOL BEFORE AND AFTER APPLYING THE BROOM FINISH.
2. SEE PLANS AND TYPICAL SECTION FOR SIDEWALK WIDTH AND LOCATIONS.
3. REINFORCEMENT SHALL CONFORM TO FORM 816 ARTICLE M.06.01.
4. THE SIDEWALK SHALL BE DIVIDED INTO SLABS SEPARATED BY EXPANSION JOINTS. THESE SLABS SHALL TYPICALLY BE 15' IN LENGTH AND EACH SLAB SHALL CONTAIN DUMMY JOINTS WITH A TYPICAL SPACING OF 5'. THIS TYPICAL SPACING IS A GUIDE AND MAY BE ALTERED IN THE FIELD BY THE ENGINEER TO MORE ACCURATELY MATCH THE EXISTING CONDITIONS.
5. THE SIDEWALK SHALL SLOPE TOWARD THE ADJACENT ROAD. IF NO ADJACENT ROAD IS PRESENT, THE SIDEWALK SLOPE DIRECTION SHALL BE AS DIRECTED BY THE ENGINEER.
6. ALL CONCRETE SIDEWALKS SHALL BE COVERED WITH WATERPROOF KRAFT PAPER FOR 3 DAYS. THE COST IS INCLUDED IN THE WORK.
7. THE CONTRACTOR SHALL SAWCUT THE EXISTING SIDEWALK AT ANY LOCATION WHERE THE NEW SIDEWALK ABUTS THE OLD SIDEWALK.
8. PLACE AN EXPANSION JOINT AT ALL LOCATIONS WHERE THE SIDEWALK WILL BE CAST AGAINST A WALL OR OTHER FIXED OBJECT. COST TO BE INCIDENTAL TO THE WORK.

CONCRETE SIDEWALK
NOT TO SCALE

FINAL DESIGN REVIEW

REV.	DATE	REVISION DESCRIPTION	SHEET NO.
-	-	-	-
-	-	-	-
-	-	-	-
-	-	-	-
-	-	-	-
-	-	-	-

THE INFORMATION, INCLUDING ESTIMATED QUANTITIES OF WORK, SHOWN ON THESE SHEETS IS BASED ON LIMITED INVESTIGATIONS BY THE STATE AND IS IN NO WAY WARRANTED TO INDICATE THE CONDITIONS OF ACTUAL QUANTITIES OF WORK WHICH WILL BE REQUIRED.

Plotted: JUN. 20, 2016

DESIGNER/DRAFTER: AD
CHECKED BY: ME

CARDINAL ENGINEERING ASSOCIATES
3 Colony Street | Meriden, CT 06451 | 203-238-1969
Filename: P:\Civ3dProj2014\VernonSouthSt64\Prodwg\MDS 02.dwg

SIGNATURE/BLOCK: - -

PROJECT TITLE: RECONSTRUCTION OF SOUTH STREET

TOWN: VERNON

DRAWING TITLE: MISCELLANEOUS DETAILS

PROJECT NO. 146-195
DRAWING NO. MDS 02
SHEET NO. 03 08

P:\Civil 3d Projects 2014\Vernon South St64\Production Drawings\mds-02.dwg, 03 08, 6/21/2016 2:33:06 PM,
DWG To PDF.pc3, ANSI expand D (34.00 x 22.00 Inches)

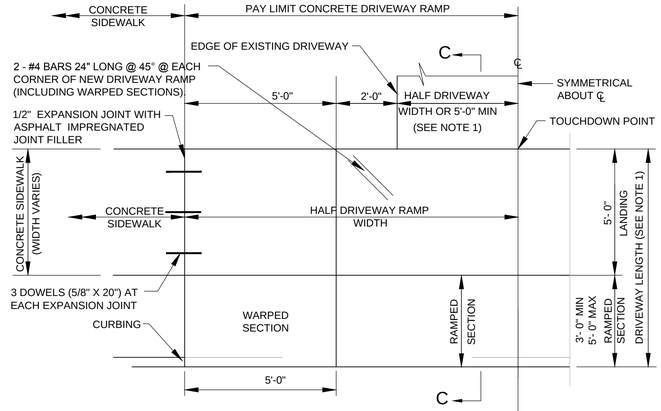

HALF PLAN

CURB SEPARATED FROM SIDEWALK BY GRASS PLOT

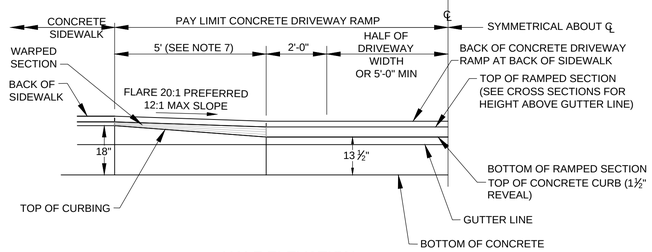

HALF ELEVATION

CURB SEPARATED FROM SIDEWALK BY GRASS PLOT

CONCRETE DRIVEWAY RAMP

NOT TO SCALE

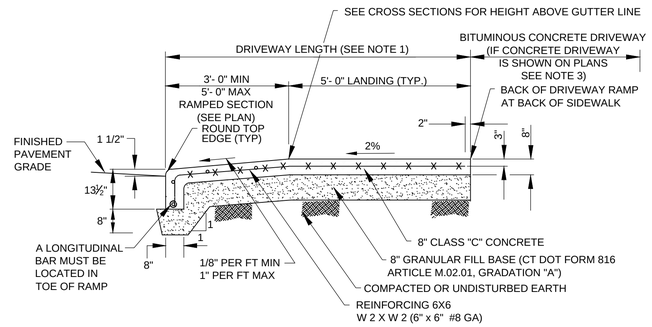

SECTION C-C

NOTES:

1. SEE CROSS SECTIONS AND PLANS FOR DRIVEWAY LENGTHS, WIDTHS, GRADES AND LOCATIONS.
2. THE TOUCHDOWN POINT WHERE THE NEW DRIVEWAY MEETS THE EXISTING DRIVEWAY SHALL BE SAWCUT. FOR EXISTING CONCRETE DRIVEWAYS, THE CONTRACTOR SHALL ADJUST THIS TOUCHDOWN POINT TO FALL AT THE CLOSEST EXISTING JOINT AND PLACE A 1/2" EXPANSION JOINT. FOUR DOWELS (⅝" X 20") SHALL BE PLACED AT THE JOINT BETWEEN THE CONCRETE DRIVEWAY RAMP AND THE CONCRETE DRIVEWAY AND FOUR AT THE JOINT BETWEEN THE EXISTING AND NEW CONCRETE DRIVEWAY. THE CONTRACTOR SHALL DRILL AND GROUT THE DOWELS INTO THE EXISTING CONCRETE DRIVEWAY AS REQUIRED AND DIRECTED BY THE ENGINEER. SAWCUTTING, THE EXPANSION JOINT, AND THE DOWELS SHALL BE INCLUDED IN THE CONTRACT UNIT PRICE PER SQUARE YARD FOR "CONCRETE DRIVEWAY RAMPS".
3. WHERE CONCRETE DRIVEWAY RAMP MEETS NEW BITUMINOUS CONCRETE DRIVEWAY, TACK COAT SHALL BE APPLIED TO CLEAN CONCRETE (CT DOT FORM 816 ARTICLE M.04.01). COST IS INCIDENTAL TO THE WORK.
4. FINISH OF DRIVES SHALL BE THE SAME AS CONCRETE SIDEWALKS.
5. ALL CONCRETE DRIVEWAY RAMPS SHALL BE COVERED WITH WATERPROOF KRAFT PAPER FOR 3 DAYS. THE COST IS INCIDENTAL TO THE WORK.
6. PLACE CONTRACTION JOINTS PERPENDICULAR TO THE GUTTER LINE AT 5' - 0" MAXIMUM SPACING.
7. THE MAXIMUM SIDEWALK GRADE SHALL BE 12:1. 12:1 MAY NOT BE ACHIEVABLE DUE TO STEEP SIDEWALK GRADES. IN RECOGNITION OF THIS A 15 - FOOT LIMIT SHALL BE USED. TRANSITION LENGTH GREATER THAN 5' SHALL BE CONSTRUCTED AND PAID AS "CONCRETE SIDEWALK."
8. CONCRETE DRIVEWAY SHALL BE CONSTRUCTED WITH THE SAME METHODS, MATERIALS, AND SECTION AS CONCRETE DRIVEWAY RAMP. CONCRETE DRIVEWAY SHALL BE PAID UNDER THE ITEM "CONCRETE DRIVEWAY RAMP," COMPLETE IN PLACE.

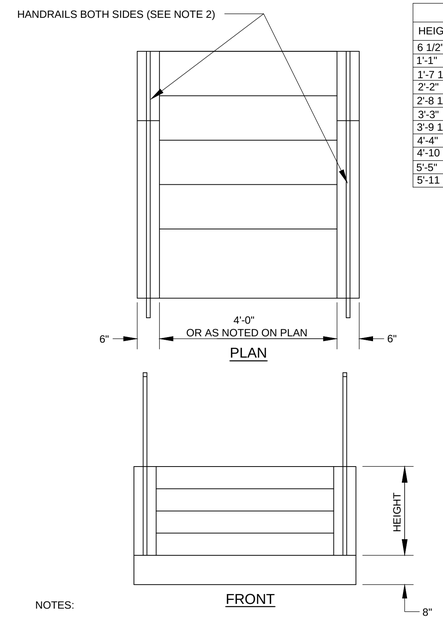

STEPS CONFORMING TO 2:1 SLOPE							
HEIGHT	LENGTH	NO. RISERS	VOL(CY)	HEIGHT	LENGTH	NO. RISERS	VOL(CY)
6 1/2"	2'-8 11/16"	1	.453	6'-6"	14'-7 11/16"	12	3.612
1'-1"	3'-9 11/16"	2	.741	7'-0 1/2"	15'-8 11/16"	13	3.899
1'-7 1/2"	4'-10 11/16"	3	1.028	7'-7"	16'-9 11/16"	14	4.187
2'-2"	5'-11 11/16"	4	1.315	8'-1 1/2"	17'-10 11/16"	15	4.474
2'-8 1/2"	7'-0 11/16"	5	1.602	8'-8"	18'-11 11/16"	16	4.761
3'-3"	8'-1 11/16"	6	1.891	9'-2 1/2"	20' 0 11/16"	17	5.048
3'-9 1/2"	9'-2 11/16"	7	2.176	9'-9"	21'-1 11/16"	18	5.335
4'-4"	10'-3 11/16"	8	2.463	10'-3 1/2"	22'-2 11/16"	19	5.622
4'-10 1/2"	11'-4 11/16"	9	2.750	10'-10"	23'-3 11/16"	20	5.909
5'-5"	12'-5 11/16"	10	3.037	11'-4 1/2"	24'-4 11/16"	21	6.196
5'-11 1/2"	13'-6 11/16"	11	3.325	11'-11"	25'-5 11/16"	22	6.483

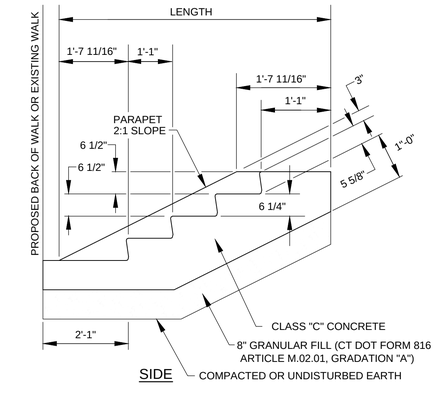

NOTES:

1. ALL STEPS SHALL HAVE UNIFORM RISER HEIGHTS AND UNIFORM TREAD DEPTHS. RISERS SHALL BE A MINIMUM OF 4" (102) HIGH TO A MAXIMUM OF 7" (178) HIGH. TREADS SHALL BE A MINIMUM OF 11" (279) DEEP MEASURED FROM RISER TO RISER. ALL TREADS SHALL BE PITCHED 1/4".
2. A HAND RAIL IS REQUIRED ON BOTH SIDES OF STEPS WHERE THE DIFFERENCE IN ELEVATION BETWEEN THE HIGHEST WALKING SURFACE AND THE LOWEST WALKING SURFACE IS GREATER THAN 30" (762).

CONCRETE STEPS

NOT TO SCALE

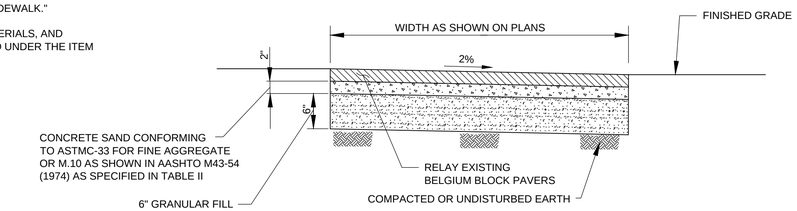

BELGIAN BLOCK PAVING

NOT TO SCALE

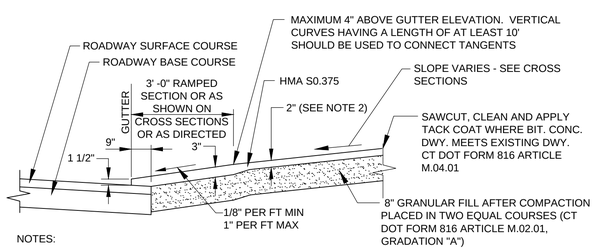

NOTES:

1. SEE CROSS SECTIONS AND PLANS FOR DRIVEWAY LOCATIONS AND GRADES.
2. INCREASE DEPTH OF ASPHALT TO 3" AT COMMERCIAL DRIVEWAYS.
3. THE TOUCHDOWN POINT WHERE THE PROPOSED DRIVEWAY MEETS THE EXISTING DRIVEWAY SHALL BE SAWCUT, CLEANED AND TACK COATED.

BITUMINOUS CONCRETE DRIVEWAY

NOT TO SCALE

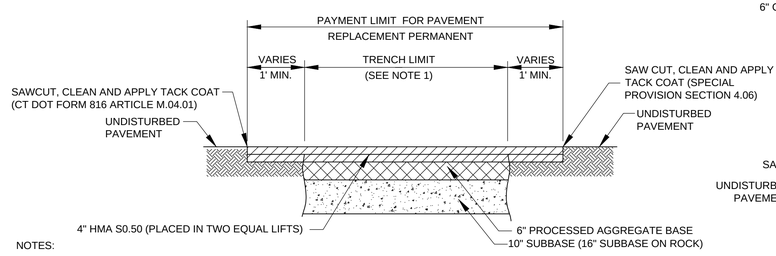

NOTES:

1. THE LIMIT OF THE TRENCH SHALL BE PIPE I.D. + 2'-0" FOR PIPES LESS THAN 30" IN DIAMETER. THE LIMIT OF THE TRENCH SHALL BE PIPE I.D. + 3'-0" FOR PIPES THAT ARE 30" OR GREATER IN DIAMETER.
2. THE CONTRACTOR SHALL SAWCUT ALL EXISTING PAVEMENT AT THE LIMITS OF PERMANENT PAVEMENT UNLESS OTHERWISE DIRECTED BY THE ENGINEER.
3. SAWCUTTING, EXCAVATION, REMOVAL OF EXISTING PAVEMENT FROM TRENCH LIMITS TO LIMITS OF PERMANENT PAVEMENT, CLEANING, TACK COAT, BIT CONC, PROCESSED AGGREGATE BASE, AND GRANULAR FILL SHALL BE INCLUDED IN THE CONTRACT UNIT PRICE PER SQUARE YARD FOR "PAVEMENT REPLACEMENT PERMANENT".
4. MINIMUM THICKNESS IN SOUTH STREET AND ITS SIDE ROADS TO BE SAME AS PROPOSED BITUMINOUS OR MATCH THICKNESS OF EXISTING PAVEMENT, WHICHEVER IS GREATER. THICKNESS IN WEST STREET SHALL BE IN ACCORDANCE WITH THE "TRENCH DETAILS FOR STATE ROADS" DRAWING NO. MDS 04.

BITUMINOUS CONCRETE PATCHING - FULL DEPTH

NOT TO SCALE

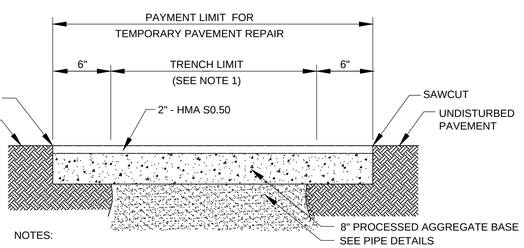

NOTES:

1. THE LIMIT OF THE TRENCH SHALL BE PIPE I.D. + 2'-0".
2. THE CONTRACTOR SHALL SAWCUT ALL EXISTING PAVEMENT AT THE LIMITS OF TEMPORARY PAVEMENT UNLESS OTHERWISE DIRECTED BY THE ENGINEER.
3. SAWCUTTING AND REMOVAL OF EXISTING PAVEMENT FROM TRENCH LIMITS TO LIMITS OF TEMPORARY PAVEMENT SHALL BE INCLUDED IN THE CONTRACT UNIT PRICE PER SQUARE YARD FOR "TEMPORARY PAVEMENT".

TEMPORARY PAVEMENT

NOT TO SCALE

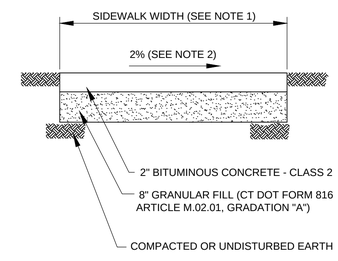

CROSS SECTION

NOTES:

1. SEE PLANS FOR SIDEWALK WIDTH AND LOCATIONS.
2. THE SIDEWALK SHALL SLOPE TOWARD THE ADJACENT ROAD. IF NO ADJACENT ROAD IS PRESENT, THE SIDEWALK SLOPE DIRECTION SHALL BE AS DIRECTED BY THE ENGINEER.
3. THE CONTRACTOR SHALL SAWCUT THE EXISTING SIDEWALK AT ANY LOCATION WHERE THE NEW SIDEWALK ABUTS THE OLD SIDEWALK.

BITUMINOUS CONCRETE SIDEWALK

NOT TO SCALE

FINAL DESIGN REVIEW

REV.	DATE	REVISION DESCRIPTION	SHEET NO.
-	-	-	-
-	-	-	-
-	-	-	-
-	-	-	-
-	-	-	-
-	-	-	-

THE INFORMATION, INCLUDING ESTIMATED QUANTITIES OF WORK, SHOWN ON THESE SHEETS IS BASED ON LIMITED INVESTIGATIONS BY THE STATE AND IS IN NO WAY WARRANTED TO INDICATE THE CONDITIONS OF ACTUAL QUANTITIES OF WORK WHICH WILL BE REQUIRED.

Plotted: JUN. 28, 2016

DESIGNER/DRAFTER: AD
CHECKED BY: ME

CARDINAL ENGINEERING ASSOCIATES
3 Colony Street | Meriden, CT 06451 | 203-238-1969
Filename: P:\Civ3dProj2014\VernonSouthSt64\Prodwg\MDS 03.dwg

SIGNATURE/BLOCK: - -

PROJECT TITLE: RECONSTRUCTION OF SOUTH STREET

TOWN: VERNON

DRAWING TITLE: MISCELLANEOUS DETAILS

PROJECT NO. 146-195
DRAWING NO. MDS 03
SHEET NO. 03 09

P:\Civil 3d Projects 2014\Vernon South St64\Production Drawings\mds 03.dwg, 03 09, 6/27/2016 9:37:48 AM,
DWG To PDF.pc3, ANSI expand D (34.00 x 22.00 Inches)

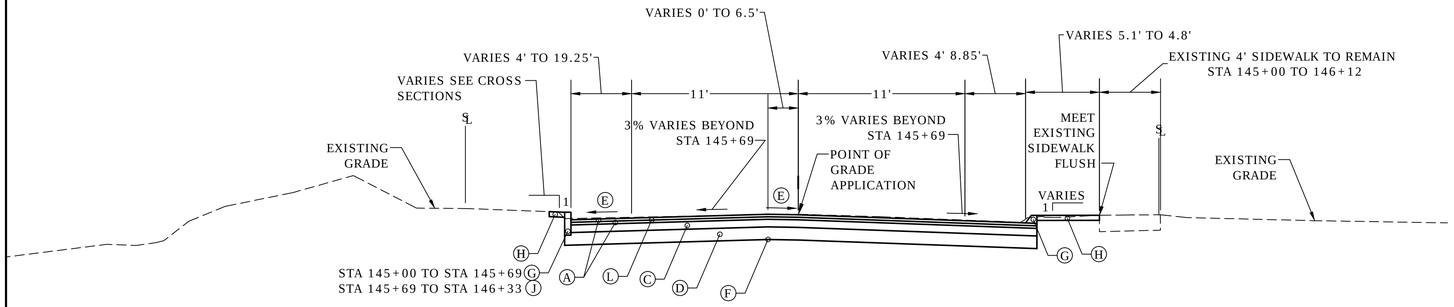

SOUTH STREET - STA 145+00 TO STA 146+37.71

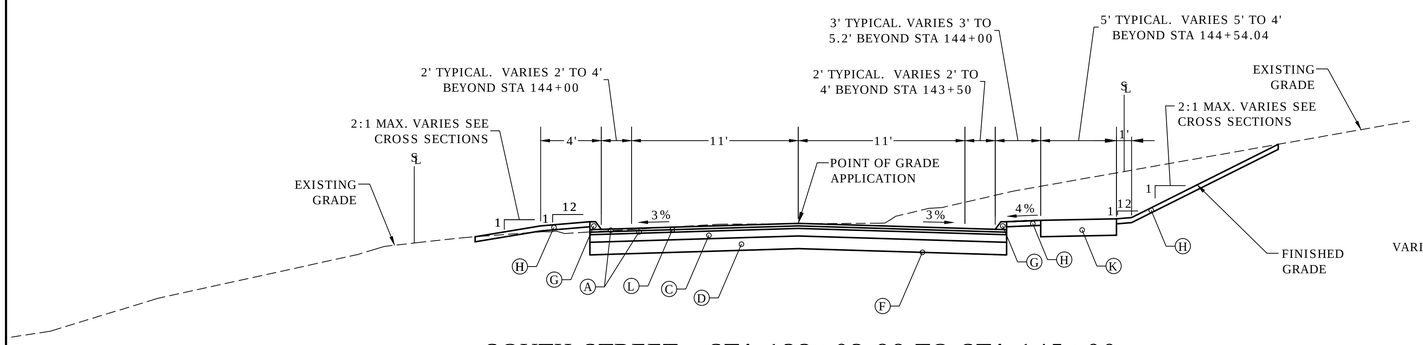

SOUTH STREET - STA 132+02.88 TO STA 145+00

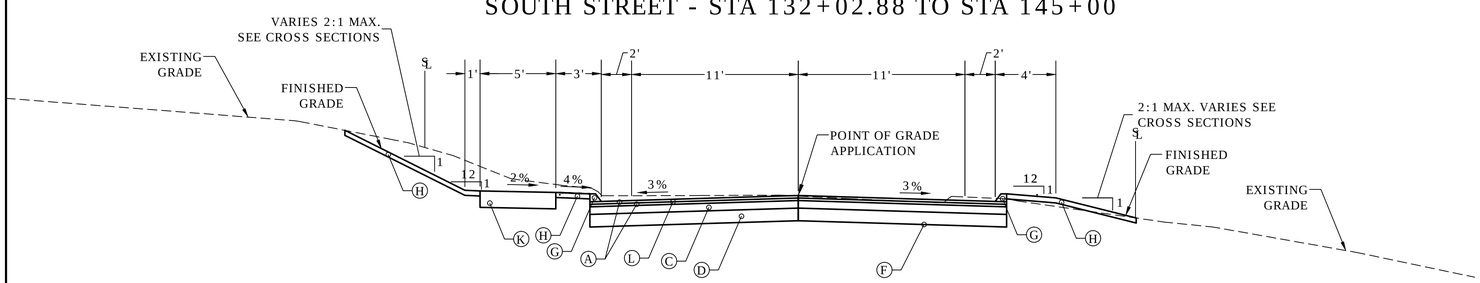

SOUTH STREET - STA 101+00 TO STA 132+02.88

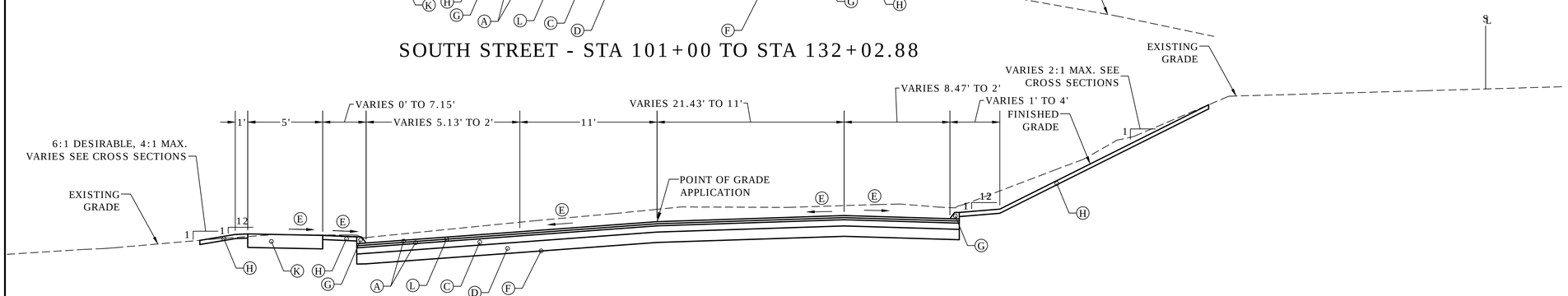

SOUTH STREET - STA 99+57 TO STA 101+00

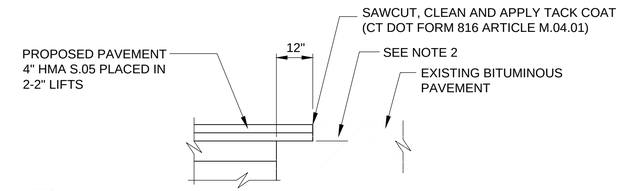

NOTES:

1. THIS DETAIL IS TO BE USED WHERE "MEET EXISTING PAVEMENT" OR "CUT & MATCH EXISTING PAVEMENT" IS CALLED FOR ON THE PLANS AND AT SIDEROADS DESIGNATED AS "SAWCUT".
2. OVERLAP BOTH BITUMINOUS CONCRETE COURSES (2" HMA S0.5 AND 2" HMA S0.5) OVER EXISTING SUBBASE.
3. MINIMUM THICKNESS TO BE SAME AS PROPOSED BITUMINOUS OR MATCH THICKNESS OF EXISTING PAVEMENT, WHICHEVER IS GREATER.
4. PAVEMENT MATCH TREATMENT WILL BE INCIDENTAL TO THE WORK.

PAVEMENT MATCH TREATMENT

NOT TO SCALE

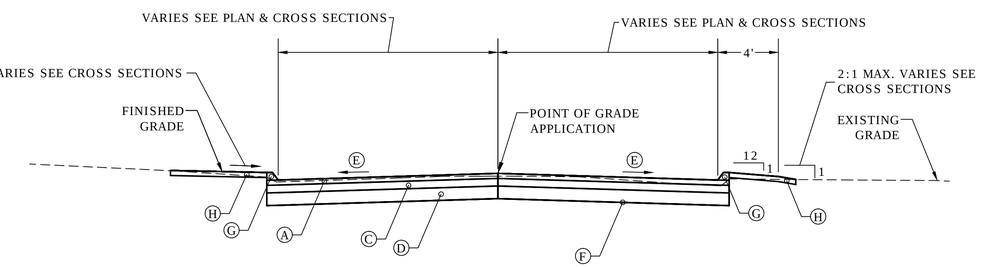

LOCAL ROADS

LEGEND

- (A) 4" HMA S0.50 PLACED IN TWO EQUAL LIFTS
- (C) 6" PROCESSED AGGREGATE BASE
- (D) 10" SUBBASE, 18" SUBBASE ON ROCK
- (E) VARIES SEE PLAN, CROSS SECTIONS & INTERSECTION GRADING PLAN FOR DIMENSIONS & CROSS SLOPES
- (F) COMPACTED SUBGRADE
- (G) BITUMINOUS CONCRETE LIP CURBING
- (H) 4" TOPSOIL AND TURF ESTABLISHMENT
- (J) RESET GRANITE STONE CURBING
- (K) CONCRETE SIDEWALK
- (L) MATERIAL FOR TACK COAT

FINAL DESIGN REVIEW

REV.	DATE	REVISION DESCRIPTION	SHEET NO.
-	-	-	-
-	-	-	-
-	-	-	-
-	-	-	-
-	-	-	-
-	-	-	-

Plotted: APR. 29, 2016

DESIGNER/DRAFTER: AD
CHECKED BY: ME

CARDINAL ENGINEERING ASSOCIATES
3 Colony Street | Meriden, CT 06451 | 203-238-1969
Filename: P:\Civil3dProj2014\VernonSouthSt64\ProdDwgs\TYP 01.dwg

SIGNATURE/BLOCK: - -

PROJECT TITLE: RECONSTRUCTION OF SOUTH STREET

TOWN: VERNON

DRAWING TITLE: TYPICAL SECTIONS

PROJECT NO. 146-195
DRAWING NO. TYP 01
SHEET NO. 03 10

P:\Civil 3d Projects 2014\Vernon South St64\Production Drawings\TYP 01.dwg, 03 10, 5/3/2016 1:43:14 PM,
DWG To PDF.pc3, ANSI expand D (34.00 x 22.00 inches)

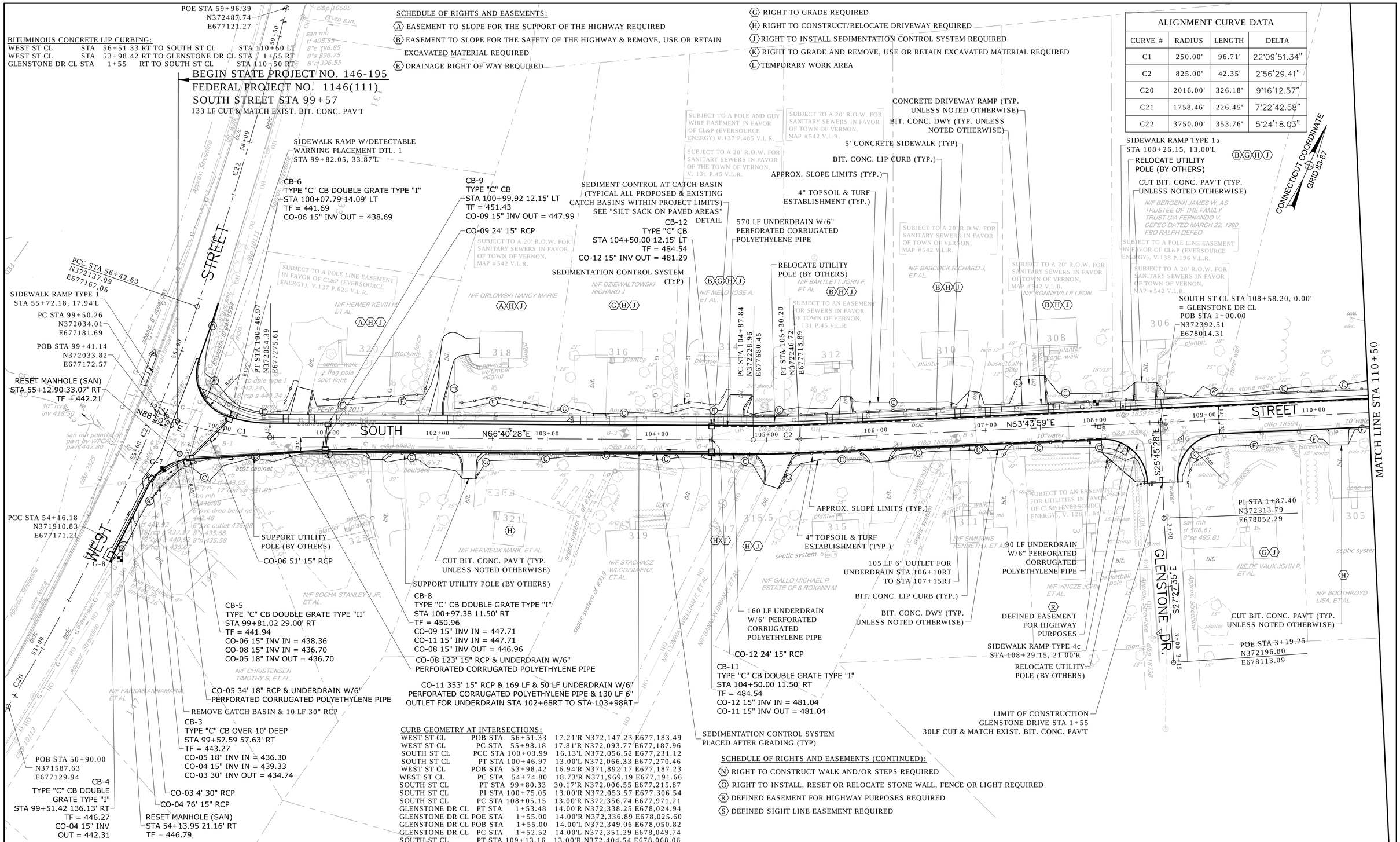

REV.	DATE	REVISION DESCRIPTION	SHEET NO.
-	-	-	-
-	-	-	-
-	-	-	-
-	-	-	-
-	-	-	-
-	-	-	-

Plotted: JULY 21, 2016

DESIGNER/DRAFTER: AD
CHECKED BY: ME
SCALE IN FEET 0 40 80
SCALE 1"=40'

CARDINAL ENGINEERING ASSOCIATES
3 Colony Street | Meriden, CT 06451 | 203-238-1969
Filename: P:\Civ3dProj2014\VernonSouthSt64\Prodwg\VFG-SouthSt(1)(1).dwg

SIGNATURE/BLOCK: - -

PROJECT TITLE: RECONSTRUCTION OF SOUTH STREET

TOWN: VERNON

DRAWING TITLE: PLAN

PROJECT NO. 146-195
DRAWING NO. PLN 01
SHEET NO. 03 11

P:\Civil 3d Projects 2014\Vernon South St64\Production Drawings\VFG - SouthSt\CL - (1) - (1).dwg, PLN 01, 7/21/2016 2:40:58 PM,
DWG To PDF.pc3, ANSI expand D (34.00 x 22.00 Inches)

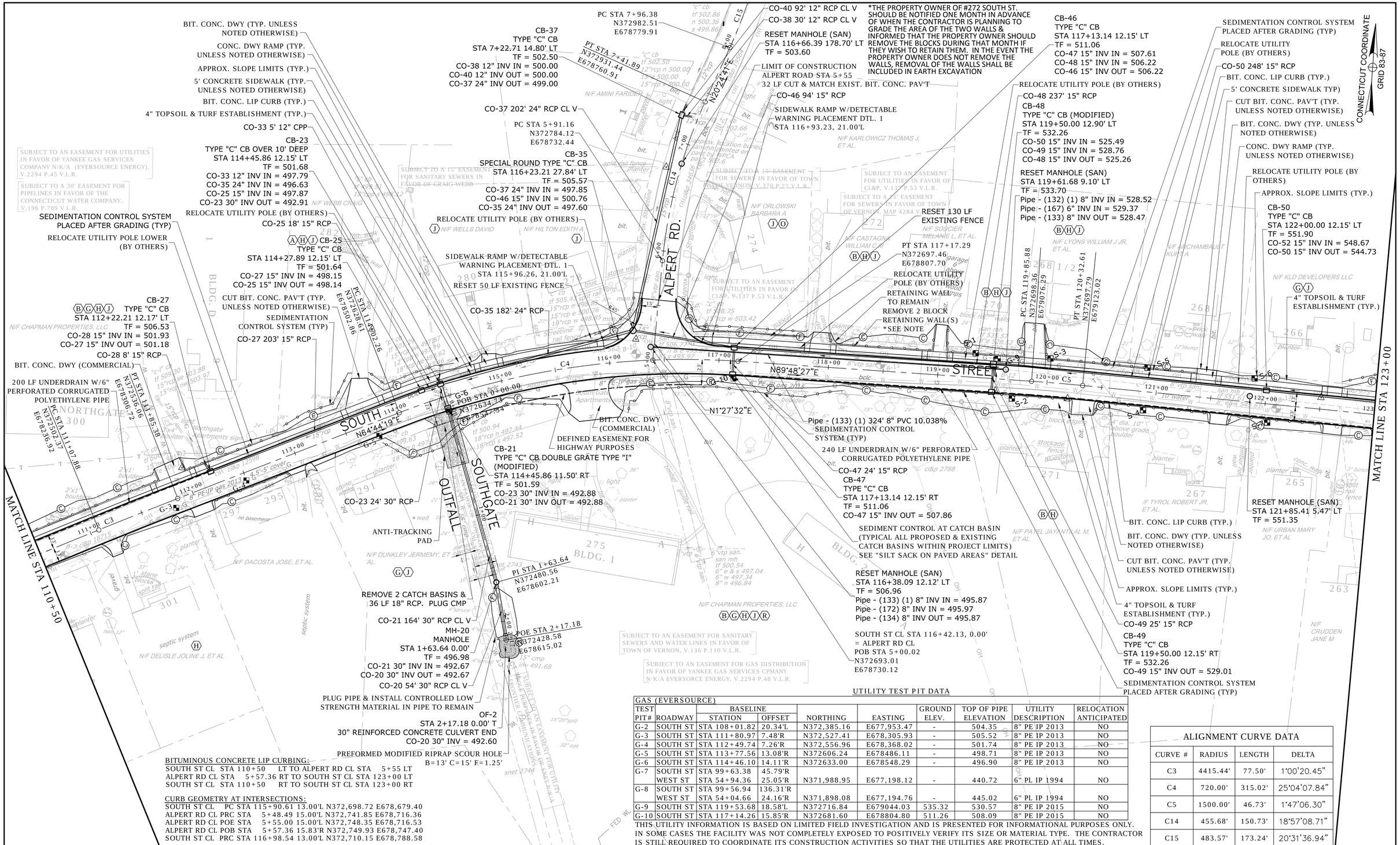

BITUMINOUS CONCRETE LIP CURBING:
SOUTH ST CL STA 110+50 LT TO ALPERT RD CL STA 5+55 LT
ALPERT RD CL STA 5+57.36 RT TO SOUTH ST CL STA 123+00 LT
SOUTH ST CL STA 110+50 RT TO SOUTH ST CL STA 123+00 RT

CURB GEOMETRY AT INTERSECTIONS:
SOUTH ST CL PC STA 115+90.61 13.00'L N372,698.72 E678,679.40
ALPERT RD CL PRC STA 5+48.49 15.00'L N372,741.85 E678,716.36
ALPERT RD CL POE STA 5+55.00 15.00'L N372,748.35 E678,716.53
ALPERT RD CL POB STA 5+57.36 15.83'R N372,749.93 E678,747.40
SOUTH ST CL PRC STA 116+98.54 13.00'L N372,710.15 E678,788.58

UTILITY TEST PIT DATA

GAS (EVERSOURCE)

TEST PIT#	ROADWAY	BASELINE STATION	BASELINE OFFSET	NORTHING	EASTING	GROUND ELEV.	TOP OF PIPE ELEVATION	UTILITY DESCRIPTION	RELOCATION ANTICIPATED
G-2	SOUTH ST	STA 108+01.82	20.34'L	N372,385.16	E677,953.47	-	504.35	8" PE IP 2013	NO
G-3	SOUTH ST	STA 111+80.97	7.48'R	N372,527.41	E678,305.93	-	505.52	8" PE IP 2013	NO
G-4	SOUTH ST	STA 112+49.74	7.26'R	N372,556.96	E678,368.02	-	501.74	8" PE IP 2013	NO
G-5	SOUTH ST	STA 113+77.56	13.08'R	N372606.24	E678486.11	-	498.71	8" PE IP 2013	NO
G-6	SOUTH ST	STA 114+46.10	14.11'R	N372633.00	E678548.29	-	496.90	8" PE IP 2013	NO
G-7	SOUTH ST WEST ST	STA 99+63.38 STA 54+94.36	45.79'R 25.05'R	N371,988.95	E677,198.12	-	440.72	6" PL IP 1994	NO
G-8	SOUTH ST WEST ST	STA 99+56.94 STA 54+04.66	136.31'R 24.16'R	N371,898.08	E677,194.76	-	445.02	6" PL IP 1994	NO
G-9	SOUTH ST	STA 119+53.68	18.58'L	N372716.84	E679044.03	535.32	530.57	8" PE IP 2015	NO
G-10	SOUTH ST	STA 117+14.26	15.85'R	N372681.60	E678804.80	511.26	508.09	8" PE IP 2015	NO

THIS UTILITY INFORMATION IS BASED ON LIMITED FIELD INVESTIGATION AND IS PRESENTED FOR INFORMATIONAL PURPOSES ONLY. IN SOME CASES THE FACILITY WAS NOT COMPLETELY EXPOSED TO POSITIVELY VERIFY ITS SIZE OR MATERIAL TYPE. THE CONTRACTOR IS STILL REQUIRED TO COORDINATE ITS CONSTRUCTION ACTIVITIES SO THAT THE UTILITIES ARE PROTECTED AT ALL TIMES.

ALIGNMENT CURVE DATA

CURVE #	RADIUS	LENGTH	DELTA
C3	4415.44'	77.50'	1°00'20.45"
C4	720.00'	315.02'	25°04'07.84"
C5	1500.00'	46.73'	1°47'06.30"
C14	455.68'	150.73'	18°57'08.71"
C15	483.57'	173.24'	20°31'36.94"

REV.	DATE	REVISION DESCRIPTION	SHEET NO.
-	-	-	-
-	-	-	-
-	-	-	-
-	-	-	-
-	-	-	-
-	-	-	-

Plotted: JULY 21, 2016

DESIGNER/DRAFTER: AD
CHECKED BY: ME
SCALE IN FEET 0 40 80
SCALE 1"=40'

CARDINAL ENGINEERING ASSOCIATES
3 Colony Street | Meriden, CT 06451 | 203-238-1969
Filename: P:\Civ3dProj2014\VernonSouthSt64\Prodwg\VFG-SouthSt(1)(1).dwg

SIGNATURE/BLOCK: - -

PROJECT TITLE: RECONSTRUCTION OF SOUTH STREET

TOWN: VERNON

DRAWING TITLE: PLAN

PROJECT NO. 146-195
DRAWING NO. PLN 02
SHEET NO. 03 12

P:\Civil 3d Projects 2014\Vernon South St64\Production Drawings\VFG - SouthSt(L - (1).dwg, PLN 02, 7/21/2016 2:41:08 PM,
DWG To PDF.pc3, ANSI expand D (34.00 x 22.00 Inches)

BITUMINOUS CONCRETE LIP CURBING:

SOUTH ST CL	STA 123+00	LT TO JANET LA CL	STA 10+60 LT
JANET LA CL	STA 10+60	RT TO SOUTH ST CL	STA 135+00 LT
SOUTH ST CL	STA 123+00	RT TO EVERGREEN RD CL	STA 15+60 RT
EVERGREEN RD CL	STA 15+63.07	LT TO KNOLLWOOD DR CL	STA 20+60 RT
KNOLLWOOD DR CL	STA 20+60	LT TO SOUTH ST CL	STA 135+00 RT

ALIGNMENT CURVE DATA

CURVE #	RADIUS	LENGTH	DELTA
C8	1500.00'	60.13'	2°17'48.98"
C9	900.00'	170.52'	10°51'19.24"
C16	200.00'	28.73'	8°13'52.50"
C17	800.00'	177.63'	12°43'18.26"

CONNECTICUT COORDINATE GRID 83-87

LIMIT OF CONSTRUCTION JANET LANE STA 10+60 32 LF CUT & MATCH EXIST. BIT. CONC. PAV'T

RELOCATE UTILITY POLE (BY OTHERS)

BIT. CONC. LIP CURB (TYP.)

POE STA 12+24.51 N372909.58 E679554.73

SIDEWALK RAMP W/ DETECTABLE WARNING PLACEMENT DTL. 1 STA 124+01.44, 21.00'L

5' CONCRETE SIDEWALK (TYP)

CO-52 309' 15" RCP

CUT BIT. CONC. PAV'T (TYP. UNLESS NOTED OTHERWISE)

DEFINED EASEMENT FOR HIGHWAY PURPOSES

SIDEWALK RAMP W/DETECTABLE WARNING PLACEMENT DTL. 1 STA 124+93.83, 21.00'L

SEDIMENT CONTROL AT CATCH BASIN (TYPICAL ALL PROPOSED & EXISTING CATCH BASINS WITHIN PROJECT LIMITS) SEE "SILT SACK ON PAVED AREAS" DETAIL

CB-52 TYPE "C" CB DOUBLE GRATE TYPE "I" STA 125+09.27 11.50' LT TF = 563.17 CO-52 15" INV OUT = 559.63

RELOCATE UTILITY POLE (BY OTHERS)

RESET 50 LF FENCE REMOVE 10 LF & RESET 16 LF FENCE

CONCRETE WALK

RESET MANHOLE (SAN) STA 126+55.09 2.25' LT TF = 567.73

RELOCATE UTILITY POLE (BY OTHERS)

SOUTH ST CL STA 126+71.37, 0.00' = EVERGREEN RD CL POB STA 15+00.86 N372680.04 E679761.48

BIT. CONC. LIP CURB (TYP.)

5' CONCRETE SIDEWALK (TYP)

4" TOPSOIL & TURF ESTABLISHMENT (TYP.)

APPROX. SLOPE LIMITS (TYP.)

RELOCATE UTILITY POLE (BY OTHERS)

SEDIMENTATION CONTROL SYSTEM PLACED AFTER GRADING (TYP)

RESET MANHOLE (SAN) STA 127+85.28 2.24' LT TF = 571.73

DEFINED EASEMENT FOR HIGHWAY PURPOSES

POE STA 17+15.96 N372466.53 E679785.01

RELOCATE UTILITY POLE (BY OTHERS)

RESET MANHOLE (SAN) STA 131+97.55 4.90' LT TF = 590.94

CONCRETE WALK

CONCRETE WALK

BIT. CONC. DWY (TYP. UNLESS NOTED OTHERWISE)

CUT BIT. CONC. PAV'T (TYP. UNLESS NOTED OTHERWISE)

CONC. DWY RAMP (TYP. UNLESS NOTED OTHERWISE)

RELOCATE UTILITY POLE (BY OTHERS)

RESET MANHOLE (SAN) STA 130+11.31 4.80' LT TF = 581.76

4" TOPSOIL & TURF ESTABLISHMENT (TYP.)

CUT BIT. CONC. PAV'T (TYP. UNLESS NOTED OTHERWISE)

APPROX. SLOPE LIMITS (TYP.)

BIT. CONC. LIP CURB (TYP.)

2 CONCRETE STEPS & WALK

SEDIMENTATION CONTROL SYSTEM (TYP)

PC STA 132+10.85 N372665.04 E680300.81

SOUTH ST CL STA 132+35.42, 0.00' = KNOLLWOOD DR CL POB STA 20+00.03 N372664.16 E680325.30

S2°34'21"W

PT STA 132+70.99 N372662.17 E680360.87

PC STA 134+06.94 N372652.95 E680496.51

SIDEWALK RAMP TYPE 1a STA 132+78.80, 13.00'L

6" WATER MAIN TO BE ABANDONED BY OTHERS

925 LF UNDERDRAIN W/6" PERFORATED CORRUGATED POLYETHYLENE PIPE

RELOCATE (LOWER) UTILITY POLES (BY OTHERS)

RELAY BELGIAN BLOCK PAVERS

RESET MANHOLE (SAN) STA 133+80.13 6.50' LT TF = 596.63

SIDEWALK RAMP W/DETECTABLE WARNING PLACEMENT DTL. 1 STA 132+80.80, 21.00'R

PC STA 20+17.03 N372647.18 E680324.53

PT STA 21+94.66 N372470.30 E680336.25

POE STA 22+25.01 N372440.42 E680341.59

DEFINED EASEMENT FOR HIGHWAY PURPOSES

CONC. DWY RAMP (TYP. UNLESS NOTED OTHERWISE)

BIT. CONC. DWY (TYP. UNLESS NOTED OTHERWISE)

RESET MANHOLE (SAN) STA 134+87.34 2.93' LT TF = 596.83

665 LF UNDERDRAIN W/6" PERFORATED CORRUGATED POLYETHYLENE PIPE

SOUTH ST CL STA 124+46.42, 0.00' = JANET LA CL POB STA 10+00.49 N372686.29 E679536.64

BIT. CONC. LIP CURB (TYP.)

BIT. CONC. DWY (TYP. UNLESS NOTED OTHERWISE)

RESET MANHOLE (SAN) STA 124+47.96 1.44' LT TF = 562.08

3' CONCRETE WALK

CUT BIT. CONC. PAV'T (TYP. UNLESS NOTED OTHERWISE)

DEFINED EASEMENT FOR HIGHWAY PURPOSES

S0°20'32"W

PC STA 15+28.38 N372652.51 E679761.32

PT STA 15+57.12 N372623.87 E679763.21

LIMIT OF CONSTRUCTION EVERGREEN ROAD STA 15+60 28LF CUT & MATCH EXIST. BIT. CONC. PAV'T

LIMIT OF CONSTRUCTION KNOLLWOOD DRIVE STA 20+60 31 LF CUT & MATCH EXIST. BIT. CONC. PAV'T

CURB GEOMETRY AT INTERSECTIONS:

SOUTH ST CL	PC STA 123+96.02	13.00'L	N372,700.69 E679,486.65
JANET LA CL	PT STA 10+48.75	15.00'L	N372,735.60 E679,525.59
JANET LA CL	POE STA 10+60.00	15.00'L	N372,746.82 E679,526.49
JANET LA CL	POB STA 10+60.00	15.00'R	N372,744.40 E679,556.40
JANET LA CL	PC STA 10+51.21	15.00'R	N372,735.64 E679,555.69
SOUTH ST CL	PT STA 124+99.01	13.00'L	N372,697.82 E679,589.60
SOUTH ST CL	PC STA 126+28.18	13.00'R	N372,668.24 E679,718.00
EVERGREEN RD CL	PT STA 15+40.27	14.50'R	N372,639.86 E679,747.12
EVERGREEN RD CL	POE STA 15+60.00	14.50'R	N372,619.02 E679,749.24
EVERGREEN RD CL	PC STA 15+63.07	14.50'L	N372,619.96 E679,778.38
SOUTH ST CL	PT STA 127+29.34	13.00'R	N372,665.43 E679,819.12
SOUTH ST CL	PC STA 131+85.62	13.00'R	N372,652.75 E680,275.22
KNOLLWOOD DR CL	PRC STA 20+46.83	14.50'R	N372,617.50 E680,309.25
KNOLLWOOD DR CL	POB STA 20+60.00	14.50'R	N372,604.09 E680,309.26
KNOLLWOOD DR CL	POE STA 20+60.00	14.50'L	N372,604.35 E680,338.26
KNOLLWOOD DR CL	PC STA 20+56.60	14.50'L	N372,607.68 E680,338.23
SOUTH ST CL	PT STA 132+92.00	13.00'R	N372,647.77 E680,380.95

MATCH LINE STA 123+00

MATCH LINE STA 135+00

SOUTH ST.

EVERGREEN RD.

KNOLLWOOD DR.

S88°24'26"E

S86°06'37"E

S7°53'21"E

S10°08'57"E

REV.	DATE	REVISION DESCRIPTION	SHEET NO.
-	-	-	-
-	-	-	-
-	-	-	-
-	-	-	-
-	-	-	-
-	-	-	-

Plotted: JULY 21, 2016

DESIGNER/DRAFTER: AD

CHECKED BY: ME

SCALE IN FEET 0 40 80

SCALE 1"=40'

CARDINAL ENGINEERING ASSOCIATES

3 Colony Street | Meriden, CT 06451 | 203-238-1969

Filename:P:\Civil3dProj2014\VernonSouthSt\Prodwg\VFG-SouthSt(1)(1).dwg

SIGNATURE/ BLOCK: - -

PROJECT TITLE: RECONSTRUCTION OF SOUTH STREET

TOWN: VERNON

DRAWING TITLE: PLAN

PROJECT NO. 146-195

DRAWING NO. PLN 03

SHEET NO. 03 13

P:\Civil 3d Projects 2014\Vernon South St\6A\Production Drawings\VFG - SouthSt(L - (1) - (1).dwg, PLN 03, 7/21/2016 2:41:19 PM,
DWG To PDF.pc3, ANSI expand D (34.00 x 22.00 Inches)

CURB GEOMETRY AT INTERSECTIONS:

SOUTH ST CL	PC STA 138+08.82	13.00'L	N372,579.07 E680,891.58
BANCROFT RD CL	PT STA 26+46.68	13.00'R	N372,614.54 E680,941.63
BANCROFT RD CL	PC STA 26+50.00	13.46'L	N372,609.05 E680,967.72
SOUTH ST CL	PCC STA 138+84.67	28.59'L	N372,574.97 E680,968.83
SOUTH ST CL	PT STA 139+07.83	13.00'L	N372,554.07 E680,987.33
SOUTH ST CL	PC STA 145+79.75	15.00'L	N372,452.56 E681,648.48
SOUTH ST CL	PCC STA 146+27.82	30.25'L	N372,467.21 E681,695.13
SOUTH ST CL	PT STA 146+33.29	39.81'L	N372,476.82 E681,700.52
SOUTH ST CL	PC STA 146+16.97	19.95'R	N372,416.92 E681,684.72
SOUTH ST CL	PCC STA 146+33.86	36.45'R	N372,400.56 E681,701.75
SOUTH ST CL	PT STA 146+35.20	64.65'R	N372,372.38 E681,703.34

BITUMINOUS CONCRETE LIP CURBING:
SOUTH ST CL STA 135+00 LT TO BANCROFT RD CL STA 26+46.68 RT
BANCROFT RD CL STA 26+50 LT TO SOUTH ST CL STA 145+79.75 LT

RESET GRANITE STONE CURBING:
SOUTH ST CL STA 135+00 RT TO SOUTH ST CL STA 146+35.20 RT

END STATE PROJECT NO. 146-195
FEDERAL PROJECT NO. 1146 (111)
SOUTH STREET STA 146+37.71
112 LF CUT & MATCH EXIST. BIT. CONC. PAV'T

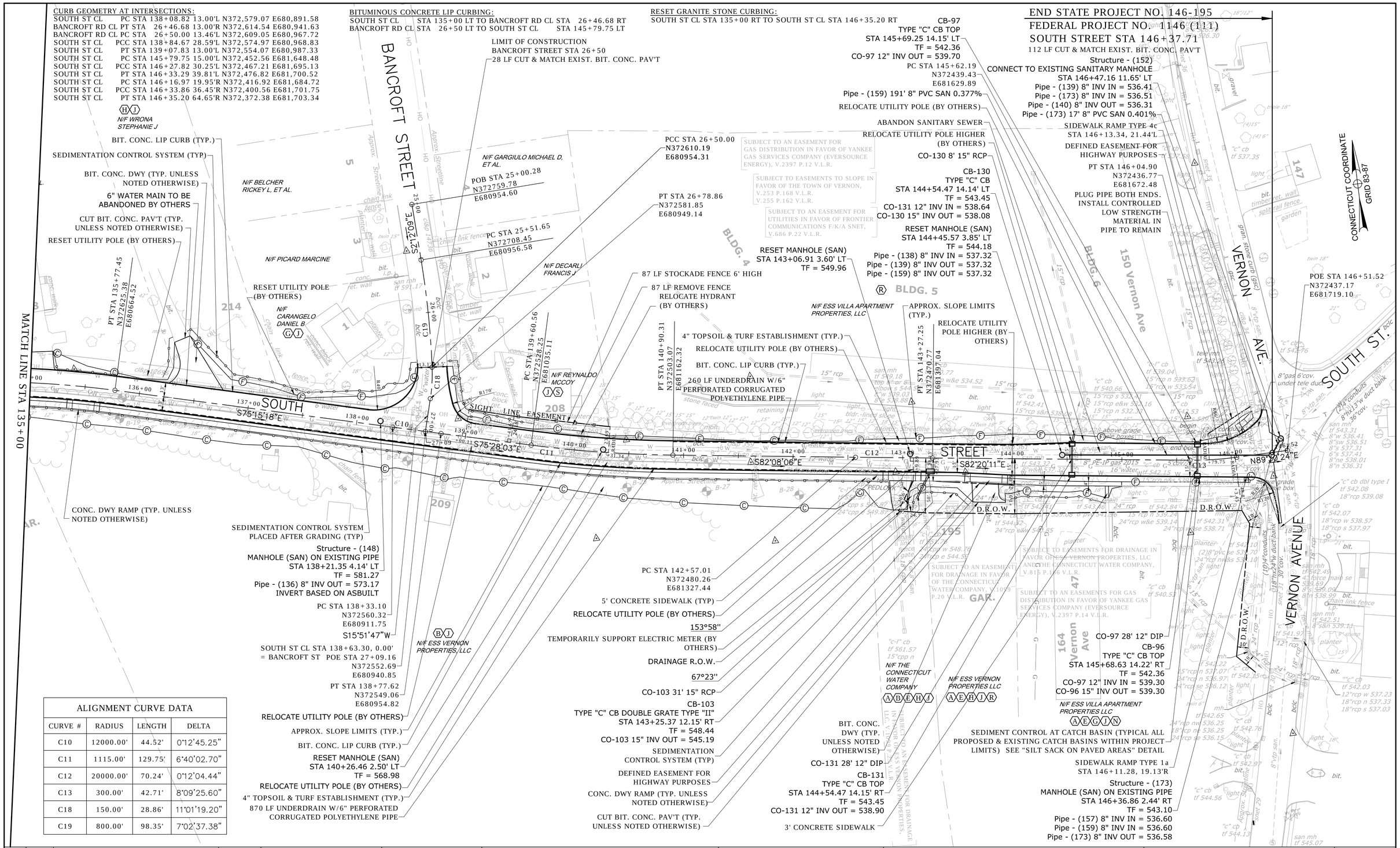

ALIGNMENT CURVE DATA

CURVE #	RADIUS	LENGTH	DELTA
C10	12000.00'	44.52'	0°12'45.25"
C11	1115.00'	129.75'	6°40'02.70"
C12	20000.00'	70.24'	0°12'04.44"
C13	300.00'	42.71'	8°09'25.60"
C18	150.00'	28.86'	11°01'19.20"
C19	800.00'	98.35'	7°02'37.38"

REV.	DATE	REVISION DESCRIPTION	SHEET NO.
-	-	-	-
-	-	-	-
-	-	-	-
-	-	-	-
-	-	-	-
-	-	-	-

Plotted: JULY 21, 2016

DESIGNER/DRAFTER: AD
CHECKED BY: ME
SCALE IN FEET 0 40 80
SCALE 1"=40'

CARDINAL ENGINEERING ASSOCIATES
3 Colony Street | Meriden, CT 06451 | 203-238-1969
Filename: P:\Civil3dProj2014\VernonSouthSt\Prodwg\VFG-SouthSt(1)(1).dwg

SIGNATURE/ BLOCK: - -

PROJECT TITLE: RECONSTRUCTION OF SOUTH STREET

TOWN: VERNON

DRAWING TITLE: PLAN

PROJECT NO. 146-195
DRAWING NO. PLN 04
SHEET NO. 03 14

P:\Civil 3d Projects 2014\Vernon South 5164\Production Drawings\VFG - SouthSt\CL - (1) - (1).dwg, PLN 04, 7/21/2016 2:41:29 PM,
DWG To PDF.pc3, ANSI expand D (34.00 x 22.00 Inches)

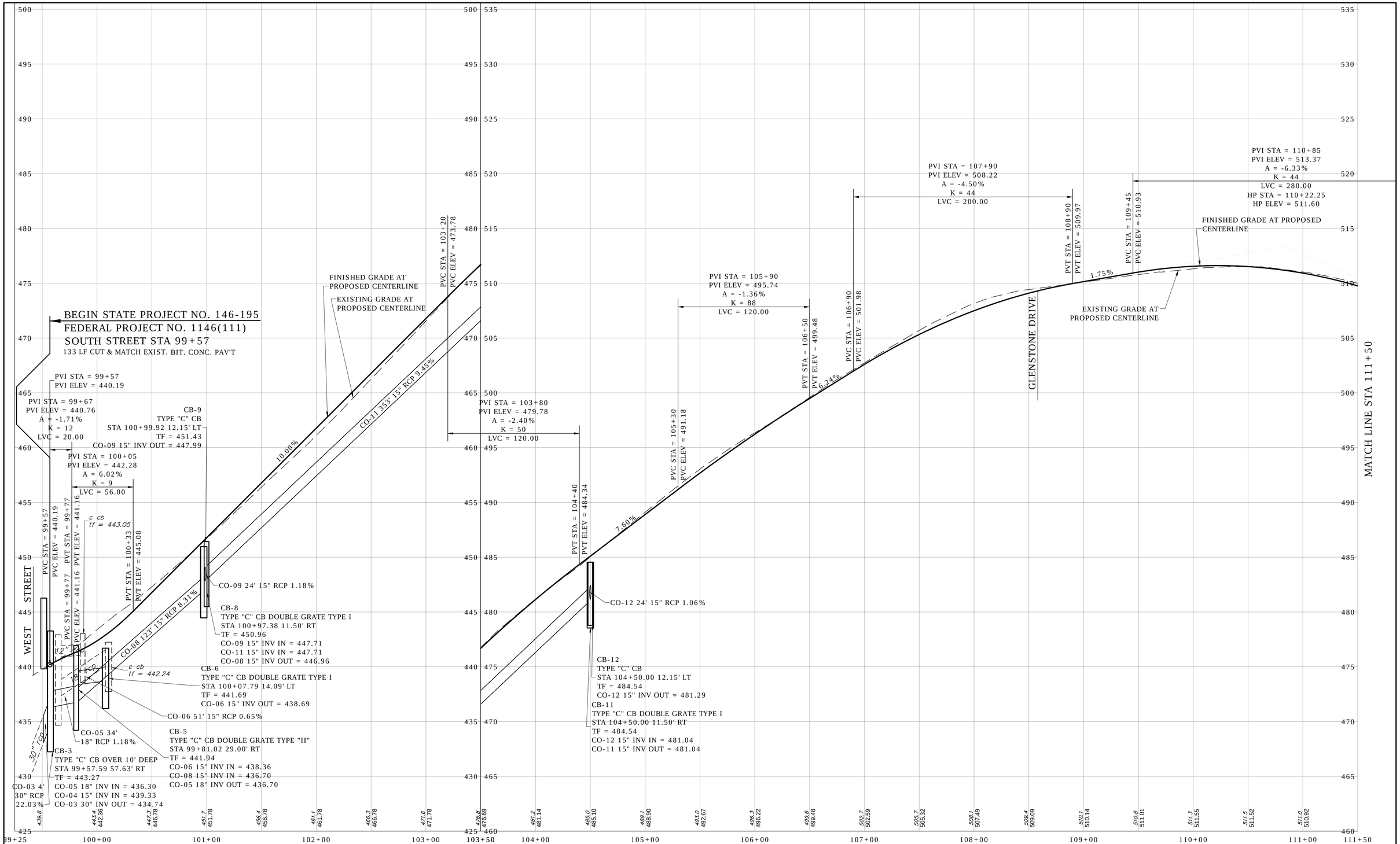

REV.	DATE	REVISION DESCRIPTION	SHEET NO.
-	-	-	-
-	-	-	-
-	-	-	-
-	-	-	-
-	-	-	-
-	-	-	-

Plotted: APR. 27, 2016

DESIGNER/DRAFTER: AD
CHECKED BY: ME
SCALE IN FEET 0 40 80
SCALE 1"=40'

CARDINAL ENGINEERING ASSOCIATES
3 Colony Street | Meriden, CT 06451 | 203-238-1969
Filename: P:\Civil3dProj2014\VernonSouthSt\SourceDwg\VernonSouthStC3d64.dwg

SIGNATURE/ BLOCK: - -

PROJECT TITLE: RECONSTRUCTION OF SOUTH STREET

TOWN: VERNON

DRAWING TITLE: SOUTH STREET PROFILE

PROJECT NO. 146-195
DRAWING NO. PRO-1
SHEET NO. 03 15

P:\Civil 3d Projects 2014\Vernon South St\A\Source Drawings\VernonSouthStC3d64.dwg, PRO - (1), 5/2/2016 1:14:23 PM,
DWG To PDF.pc3, ANSI expand D (34.00 x 22.00 Inches)

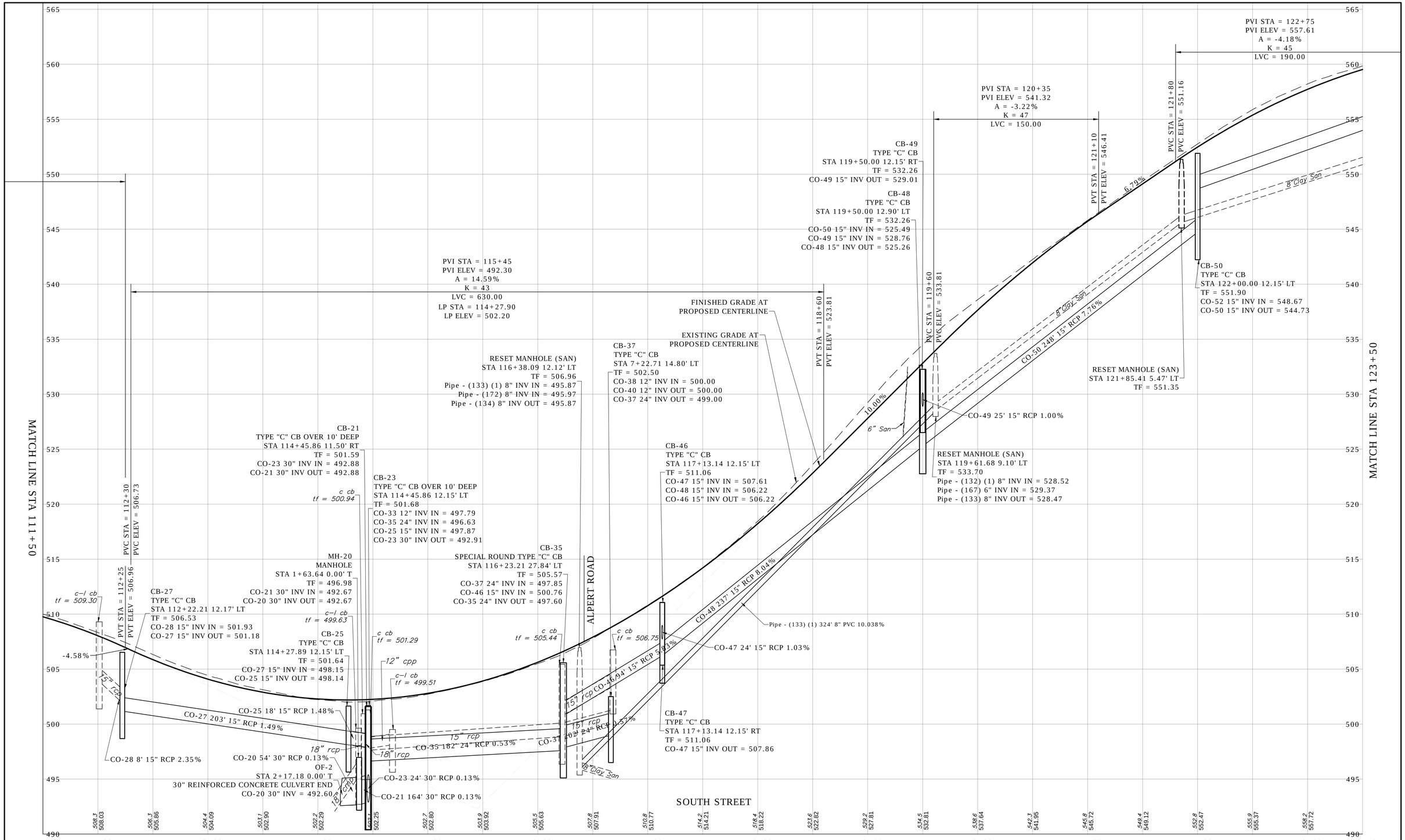

REV.	DATE	REVISION DESCRIPTION	SHEET NO.
-	-	-	-
-	-	-	-
-	-	-	-
-	-	-	-
-	-	-	-
-	-	-	-

Plotted: AUG. 21, 2016

DESIGNER/DRAFTER: AD

CHECKED BY: ME

SCALE IN FEET 0 40 80

SCALE 1"=40'

CARDINAL ENGINEERING ASSOCIATES

3 Colony Street | Meriden, CT 06451 | 203-238-1969

Filename: P:\Civil3dProj2014\VernonSouthSt64\SourceDwg\VernonSouthStC3d64.dwg

SIGNATURE/ BLOCK: - -

PROJECT TITLE: RECONSTRUCTION OF SOUTH STREET

TOWN: VERNON

DRAWING TITLE: SOUTH STREET PROFILE

PROJECT NO. 146-195

DRAWING NO. PRO-2

SHEET NO. 03 16

P:\Civil 3d Projects 2014\Vernon South St64\Source Drawings\VernonSouthStC3d64.dwg, PRO - (2), 9/21/2016 2:37:56 PM,
DWG To PDF.pc3, ANSI expand D (34.00 x 22.00 Inches)

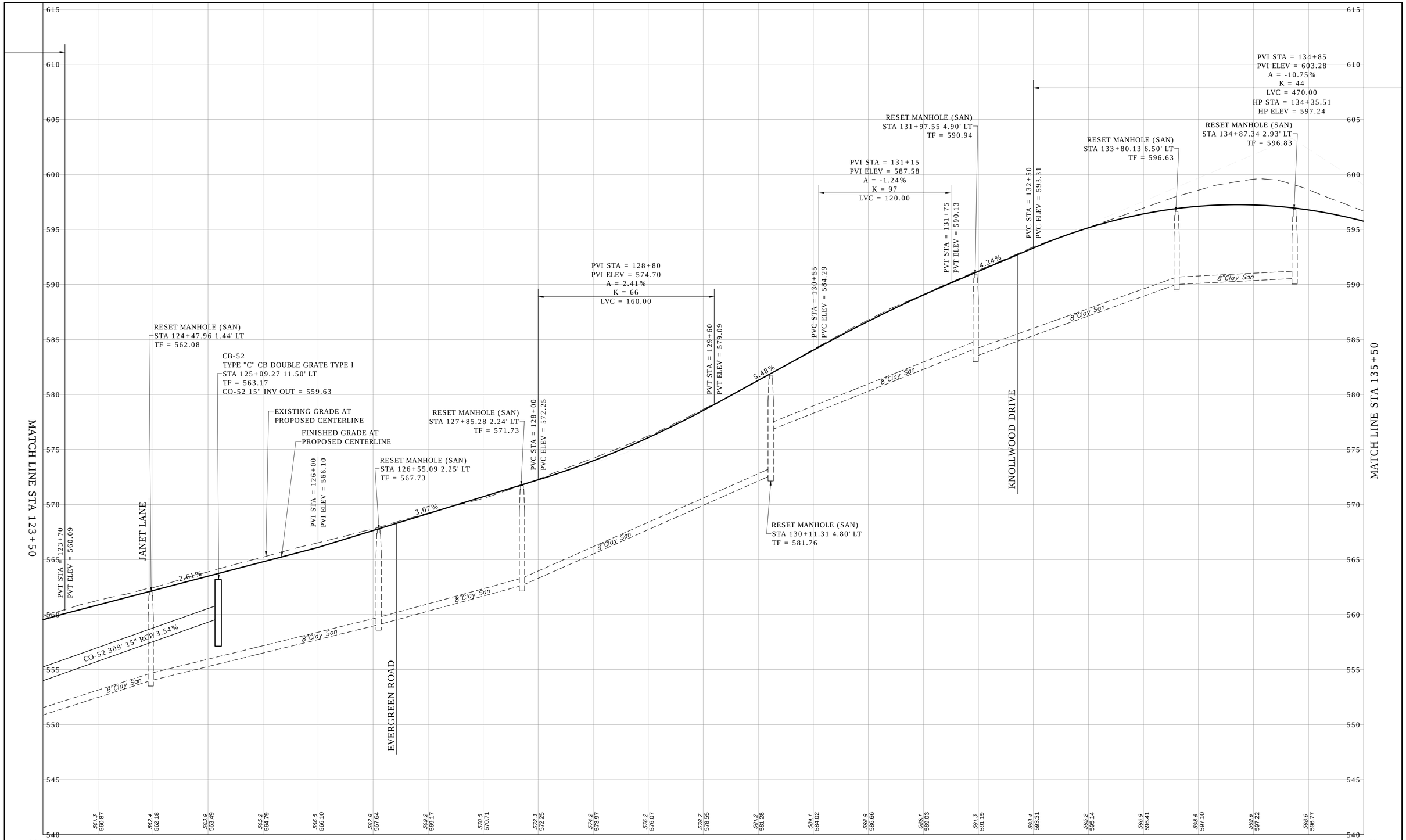

REV.	DATE	REVISION DESCRIPTION	SHEET NO.
-	-	-	-
-	-	-	-
-	-	-	-
-	-	-	-
-	-	-	-
-	-	-	-

Plotted: APR. 27, 2016

DESIGNER/DRAFTER: AD

CHECKED BY: ME

SCALE IN FEET 0 40 80

SCALE 1"=40'

CARDINAL ENGINEERING ASSOCIATES

3 Colony Street | Meriden, CT 06451 | 203-238-1969

Filename: P:\Civil3dProj2014\VernonSouthSt64\SourceDwg\VernonSouthStC3d64.dwg

SIGNATURE/ BLOCK: - -

PROJECT TITLE: RECONSTRUCTION OF SOUTH STREET

TOWN: VERNON

DRAWING TITLE: SOUTH STREET PROFILE

PROJECT NO. 146-195

DRAWING NO. PRO-3

SHEET NO. 03 17

P:\Civil 3d Projects 2014\Vernon South St64\Source Drawings\VernonSouthStC3d64.dwg, PRO - (3), 5/2/2016 1:14:53 PM, DWG To PDF.pc3, ANSI expand D (34.00 x 22.00 Inches)

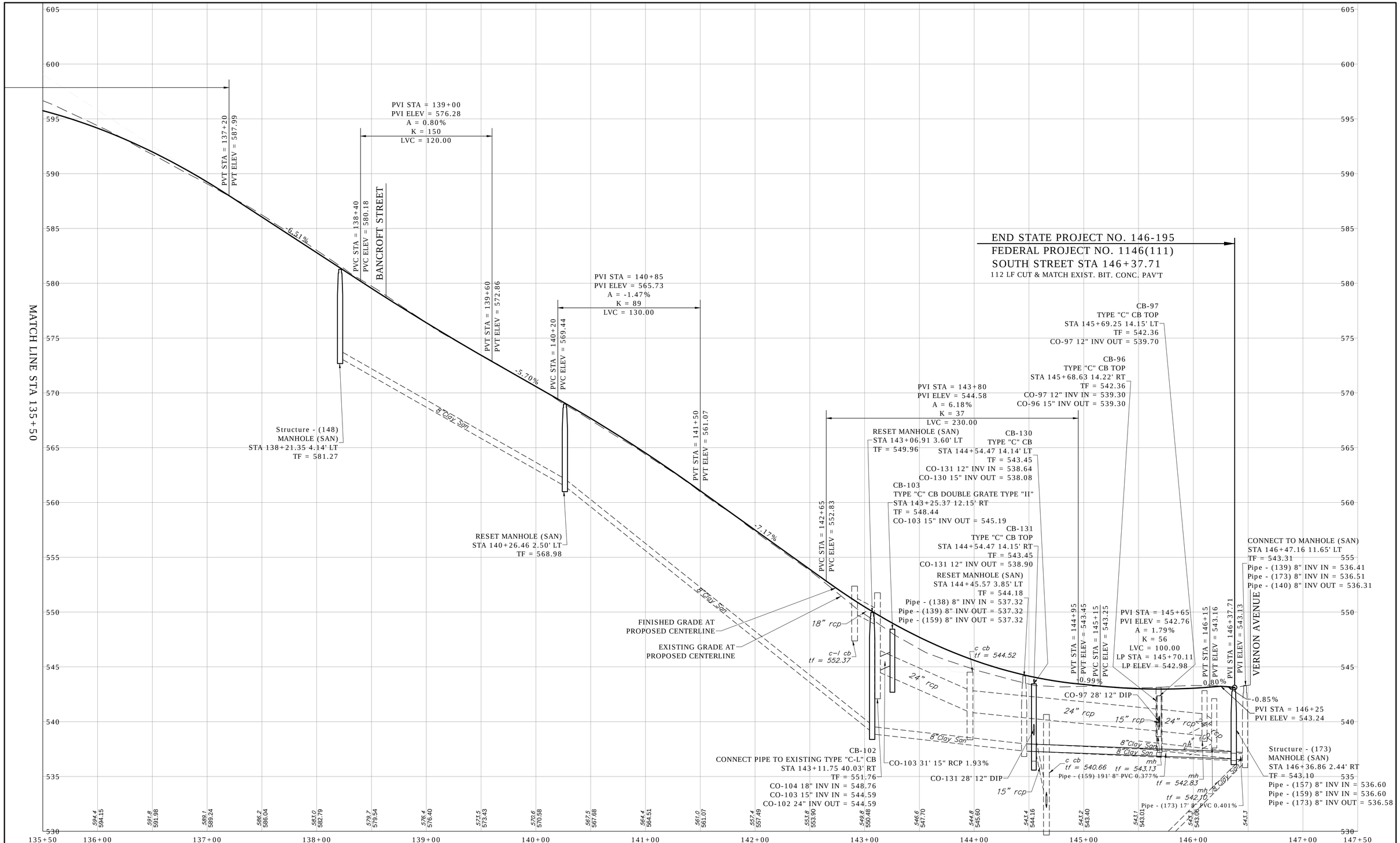

REV.	DATE	REVISION DESCRIPTION	SHEET NO.
-	-	-	-
-	-	-	-
-	-	-	-
-	-	-	-
-	-	-	-
-	-	-	-

Plotted: APR. 27, 2016

DESIGNER/DRAFTER: AD

CHECKED BY: ME

SCALE IN FEET 0 40 80

SCALE 1"=40'

CARDINAL ENGINEERING ASSOCIATES

3 Colony Street | Meriden, CT 06451 | 203-238-1969

Filename: P:\Civil3dProj2014\VernonSouthSt64\SourceDwg\VernonSouthStC3d64.dwg

SIGNATURE/ BLOCK: - -

PROJECT TITLE: RECONSTRUCTION OF SOUTH STREET

TOWN: VERNON

DRAWING TITLE: SOUTH STREET PROFILE

PROJECT NO. 146-195

DRAWING NO. PRO-4

SHEET NO. 03 18

P:\Civil 3d Projects 2014\Vernon South St64\Source Drawings\VernonSouthStC3d64.dwg, PRO - (4), 5/2/2016 1:15:08 PM,
DWG To PDF.pc3, ANSI expand D (34.00 x 22.00 Inches)

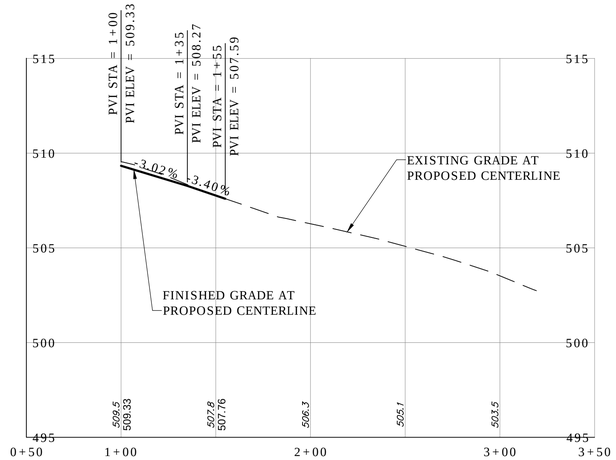

GLENSTONE DRIVE

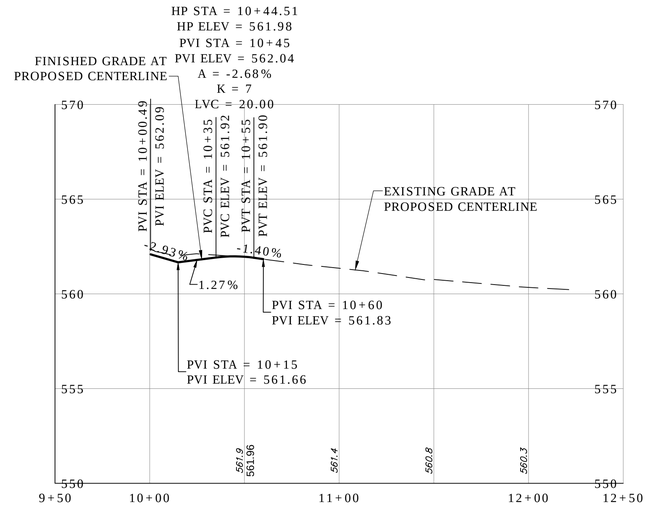

JANET LANE

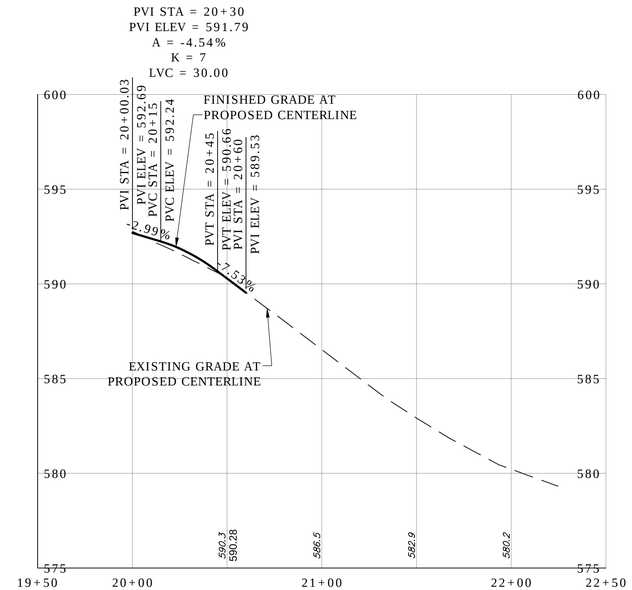

KNOLLWOOD DRIVE

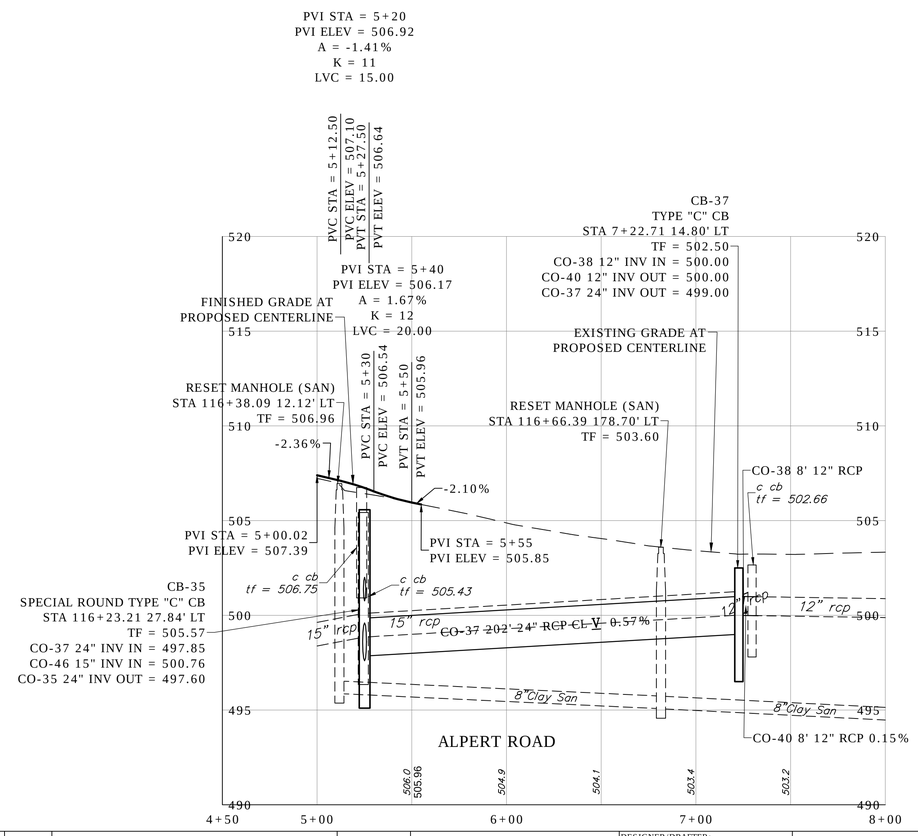

ALPERT ROAD

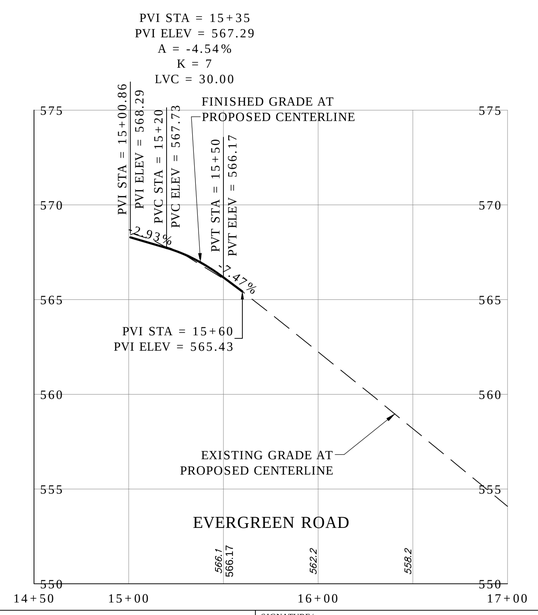

EVERGREEN ROAD

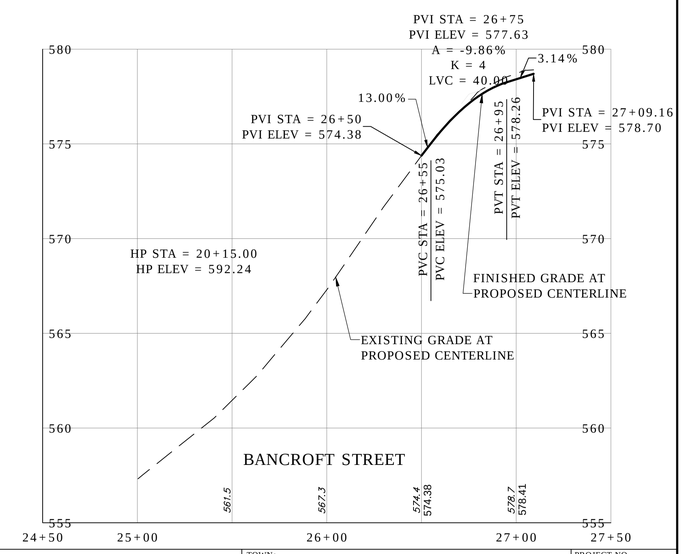

BANCROFT STREET

REV.	DATE	REVISION DESCRIPTION	SHEET NO.
-	-	-	-
-	-	-	-
-	-	-	-
-	-	-	-
-	-	-	-
-	-	-	-

Plotted: APR. 27, 2016

DESIGNER/DRAFTER: AD
CHECKED BY: ME
SCALE IN FEET 0 40 80
SCALE 1"=40'

CARDINAL ENGINEERING ASSOCIATES
3 Colony Street | Meriden, CT 06451 | 203-238-1969
Filename: P:\Civil3dProj2014\VernonSouthSt64\SourceDwg\VernonSouthStC3d64.dwg

SIGNATURE/BLOCK: - -

PROJECT TITLE: RECONSTRUCTION OF SOUTH STREET

TOWN: VERNON

DRAWING TITLE: SIDE ROAD PROFILES

PROJECT NO. 146-195
DRAWING NO. PRO-5
SHEET NO. 03 19

P:\Civil 3d Projects 2014\Vernon South St64\Source Drawings\VernonSouthStC3d64.dwg, PRO - (5), 5/2/2016 1:15:23 PM,
DWG To PDF.pc3, ANSI expand D (34.00 x 22.00 Inches)