TOWN OF VERNON
CONNECTICUT

REGULATIONS AND SPECIFICATIONS REGARDING:

CURBS, SIDEWALKS & STREET EXCAVATIONS

Engineering Department
55 West Main Street
Vernon, CT 06066
Available via internet
http://www.vernon-ct.gov/engineering.html

Revised 2/13/2014

Table of Contents

Section 1 - General Specifications

1.1 DEFINITION OF TERMS: 2
1.2 PERMIT AND LICENSE REQUIREMENTS: 4
1.3 CONTRACTOR'S RESPONSIBILITY 6
1.4 INSPECTION OF THE WORK: 7
1.5 LINE AND GRADE: 7
1.6 URGENT WORK: 7
1.7 EMERGENCY ACTION: 7
1.8 RELOCATION AND PROTECTION OF UTILITIES: 8
1.9 PROTECTION OF ADJOINING PROPERTY: 8
1.10 CONSTRUCTION MATERIALS: 8
1.11 CLEARANCE OF VITAL STRUCTURES: 8
1.12 NOISE: 8
1.13 TRENCHES: 9
1.14 EXCAVATED MATERIAL: 9
1.15 DUST CONTROL AND CLEAN UP: 9
1.16 PROMPT COMPLETION OF WORK: 9
1.17 MAINTENANCE AND PROTECTION OF TRAFFIC: 9
1.18 GENERAL CURB, WALK, DRIVEWAY AND AREAWAY REQUIREMENTS: 9

Section 2 - Material Specifications

2.1 VERTICAL GRANITE CURB: 11
2.2 CURB, JOINT SEALANT: 12
2.3 PORTLAND CEMENT CONCRETE: 12
2.4 BITUMINOUS CONCRETE: 11
2.5 PROCESSED AGGREGATE: 12
2.6 CRUSHED TRAP ROCK 12
2.7 BANK RUN GRAVEL: 12
2.8 TOPSOIL: 12
2.9 DETECTABLE WARNING STRIP: 13
2.10 INSPECTION, SAMPLING AND TESTING: 13

Section 3 - Construction Specifications

3.1 VERTICAL GRANITE CURB: 14
3.2 5-INCH PORTLAND CEMENT CONCRETE SIDEWALK: 16
3.3 8-INCH REINFORCED PORTLAND CEMENT CONCRETE WALK AND DRIVEWAY APRON: 18
3.4 DETECTABLE WARNING STRIPS: 19
3.5 BITUMINOUS CONCRETE PAVING ADJACENT TO SIDEWALKS: 199
3.6 MISCELLANEOUS CONSTRUCTION: 21
3.7 STREET EXCAVATIONS: 21

Reference Plates

Plate 1: Typical Roadway Cross Section
Plate 2: Concrete Sidewalk
Plate 3: Concrete Handicap Ramp
Plate 4: Detectable Warning Strip
Plate 5: Concrete Driveway Cross Section
Plate 6: Concrete Driveway Scoring Pattern
Plate 7: Permanent Pavement Patch
Plate 8: Granite & Bituminous Curbing
Plate 9: Road Repair - 0 to 5 Years Old
Plate 10: Road Repair - 6 to 10 Years Old
Plate 11 Road Repair - Over 10 years Old

SECTION 1.0

GENERAL SPECIFICATIONS

1.1 DEFINITION OF TERMS:

Whenever in these specifications the following terms are used, the intent and meaning shall be as follows:

Areaways: Any vault, cellarway or areaway or any cover, grating or door above the same within any street lines.

Authorized Representative: An employee of the contractor responsible to the contractor for accepting written and oral orders on the job from the Engineer (or his representative) and with the authority to take action on said orders in the contractor's absence.

Bituminous Concrete: The substance known to many people as asphalt, pavement or black top. Bituminous concrete used with respect to a driveway permit shall meet the requirements of Article M.04, of the Standard Specifications.

Catch Basin: A structure normally located in the street right of way at the curb line for the purpose of collecting storm water.

Concrete: Portland cement concrete shall be Class "F", having a minimum strength of 4,000 psi at 28 days, and shall meet the requirements of Section M.03.01 of the Standard Specifications.

Contractor: An insured, bonded and licensed contractor, performing work covered by these specifications under permit issued through the Engineering Department acting directly or through his agents or employees.

Curb: The vertical edging of the paved portion of a street, of granite, concrete or bituminous concrete installed in conformance with these specifications and accepted by the Town for future maintenance.

Curb cut: Any opening made through the curb from an adjacent property for the purpose of constructing a driveway or road.

C.U.U.P.P.: Connecticut Underground Utility Protection Plan also known as Call Before You Dig. State Law requires anyone excavating to call 1-800-922-4455 at least 2 full working days prior to excavating so utility companies can mark out their underground locations.

Director: Director of Public Works or his authorized representative

Driveway: Paved access way for vehicles from curb to front of sidewalk and back of sidewalk to street line or in the case where there is no sidewalk. The access way is from curb or gutter-line to the street line. Driving surface of the driveway may be 8" thick reinforced portland cement concrete, 2" thick bituminous concrete or 2 1/8" minimum thick concrete pavers. (See driveway ordinance #142 for specifications). The driveway will remain the responsibility of the owner for future maintenance.

Eight-Inch Walk: In such locations as may be determined by the Engineer, at all driveways constructed in accordance with Standard Specifications and Town Standards, walks shall be 8-inch thick 4,000 pound reinforced Portland cement concrete, constructed in conformance with these specifications.

Engineer: Town Engineer or his authorized representative

Engineering: Engineering Department of the Town of Vernon

SECTION 1.0

GENERAL SPECIFICATIONS

Inspector: A representative of the Engineer, assigned to make the following:
All necessary inspections of condition of all pavement, sidewalks and curbs within the Town accepted streets and to recommend necessary repair work, as well as all necessary inspections of construction and materials of sidewalk and curbs, and street excavations.

Laboratory: The testing laboratory of the Engineering Department or a commercial testing laboratory approved by the Engineer.

Manhole: Access structures for utilities at changes in line or grade, usually made of precast concrete, concrete block, brick or reinforced concrete cast in place.

Non-Accepted Construction: Construction or curbing of any material other than granite, concrete or bituminous or a sidewalk of any material other than Portland cement concrete without written approval of the Engineer is not allowed.

Pavement: The surface area of the right of way where vehicular traffic travels. Pavement is usually bituminous concrete or cement concrete.

Paving Outside the Sidewalk: With the approval of the Engineer, bituminous concrete or cement concrete paving may be constructed between the curb and sidewalk and back of the sidewalk to the street line. Two-inch bituminous concrete shall be constructed in accordance with these specifications. Portland Cement Concrete shall be of the same construction as the sidewalk and in accordance with these specifications and a longitudinal one-half inch expansion joint shall be placed adjacent to the sidewalk.

Processed Gravel: Processed gravel shall conform to the requirements of Section 3.04.01, 02 and 03 of the Standard Specifications.

Public Works: Department of Public Works of the Town of Vernon

Ramps: Paved access for vehicles from the curb to street line of 8" thick Portland Cement Concrete or 2-inch thick bituminous concrete and constructed in conformance with the driveway regulations and to remain the responsibility of the owner for future maintenance. This type of ramp to be used only in residential zones where there is no granite curbs and in industrial and commercial zones where there is neither granite curbs nor concrete sidewalks.

Registered Engineer: A person licensed to practice engineering in the state of Connecticut.

Reinforced Concrete: Concrete with welded wire mesh reinforcement placed two inches (2") up from the bottom of the slab. The welded wire mesh shall be 6" x 6" x 8 / 8.

Repair: Shall mean work on utility which restores the utility to its original working state without changing the character, location or size of the utility.

Right of Way: The land described between the street lines.

Roadway: The paved portion of the street right-of-way between the curbs and/or the vehicular travel portion of the street right-of-way.

Standard Specifications: The latest version of the State of Connecticut Standard Specifications for Roads, Bridges and Incidental Construction.

SECTION 1.0

GENERAL SPECIFICATIONS

Sidewalk: The walkway between the curb and street line of five inches (5") or thicker of concrete, or of two inches (2") or thicker of bituminous concrete. The sidewalk shall be constructed in accordance with the Town of Vernon specifications and accepted by the Town of Vernon.

Street: The word "street" shall be construed to embrace streets, avenues, boulevards, highways, roads, alleys, lanes, viaducts, bridges, and the approaches thereto and all the other public thoroughfares in the Town and shall mean all that part thereof from street line to street line of the premises abutting thereon.

Street Line: The property lines for the area known as the right of way. The Street line is generally the abutting property owner's front property line.

Sub-Contractor: Any other insured, bonded and licensed contractor to whom the contractor sublets or assigns any part or parts of the work covered by a permit, with the approval of the Engineer.

Town: Town of Vernon, Connecticut

Town Hall or Memorial Building: Executive Office of the Town of Vernon, 14 Park Place, Vernon Connecticut.

Town-Owned Sidewalk: Paved walkway between curb and street line adjacent to town-owned property or a State roadway of 5-inch thick or 8-inch thick reinforced Portland cement concrete or 2" thick bituminous concrete and constructed in conformance with these specifications.

Wheelchair Ramp: A paved way from the curb to or through the sidewalk.

1.2 PERMIT AND LICENSE REQUIREMENTS:

Under no circumstances shall a permit be approved without a valid C.U.U.P.P. number. These numbers must be renewed every 30 days by State Law. If the numbers have not been renewed, the permit will not be renewed and no further work will be allowed.

Every contractor applying for a permit to work within the Town of Vernon right of way must have a valid license from the State of Connecticut.

Every contractor making application for a permit shall file with the Town, a satisfactory performance bond, of a surety company authorized to do business in the town in the amount of ten thousand dollars ($10,000.00) and on the form provided by the Town. The performance bond shall be in force for one (1) year after the completion of the sidewalk and curb work and two (2) years after any road repairs.

The Contractor shall carry insurance under which the Town shall be named as an "additional insured" for the whole duration of this work, including the maintenance period provided herein, with an insurance company or companies licensed to write such insurance in Connecticut, against the following risks in not less than the amounts as here indicated:

Bodily Injury Liabilities shall be for not less than $100,000.00 for injuries to or death of any one individual and a total of not less than $500,000.00 to those injured or killed in any one accident.

Property Damage Liability shall include damage to property caused by explosives, blasting, vehicles, equipment, trenches or from any other cause and shall be not less than $100,000.00.

Each contractor shall file with the Town Engineer a certificate of policy covering Workmen's Compensation Insurance, which shall remain in full force for at least 12 months from the completion date of the project. The cancellation of insurance automatically suspends the permit.

SECTION 1.0

GENERAL SPECIFICATIONS

Before a permit is issued, every contractor wishing to work within the public right of way shall first obtain a Town of Vernon license per Ordinance #245. In order to obtain a license, a contractor must show his ability in installing performing the work by submitting a list of previous similar projects to the Town Engineer. Once the Town license fee has been paid, all contractors shall be automatically licensed for one project per construction season. If that project is acceptable to the Town Engineer, the contractor shall be issued a license. If the project is not acceptable, the contractor shall be notified in writing to make repairs. If the repairs are made to the satisfaction of the Town Engineer the contractor shall be issued a license. If repairs are not made, the contractor will not be issued a license and he will not be permitted to perform work in Town until such time that satisfactory repairs are made by the stated contractor.

Once a contractor has been issued a license, he is still under obligation to maintain the acceptable quality of work. If a contractor fails to make satisfactory repairs to three (3) projects in one construction season, his license will be revoked until such time that all repairs are made.

The applicant for a permit shall file with the Engineer his business address, the name under which business is done and his telephone number. The permittee shall notify the Engineer promptly of any change in the above information. Any orders or notices which the Engineer or his authorized representative may send by certified mail to the permitee at his address on file, shall be considered as due notice delivered to him personally and shall relieve the Town of further obligation.

No contractor shall take out a permit in his name for another person nor allow another person to use his name in obtaining a permit. No contractor shall employ another contractor to do work for him under a permit unless that subcontractor has a satisfactory performance bond and insurance on file with the Engineering Department.

Any construction covered by these specifications within the street lines of any street performed by contractor without a permit will be rejected. The Engineer will order the abutting property owner or the contractor to engage a contractor to remove the rejected work and to replace it in conformance with these specifications, at no cost to the Town. Should this fail to be done, the Engineer will remove and replace the rejected work in conformance with these specifications and the town will then bill the abutting property owner or the contactor for all costs involved.

The permit applications shall be made in writing, on a form provided at the Engineering Office in the Town Hall, by the contractor seventy-two (72) hours in advance of start of work. A permit shall be taken out for each location or address at which the contractor proposes to work, except one permit may cover adjacent locations that belong to the same owner on one street. In some cases, the contractor may request line and grade information in accordance with section 1.5 of these specifications.

No work shall commence until the permit fee has been paid, has been approved by the Engineering Dept. and is on the job in the hands of the contractor's authorized representative. The permit shall be on the job at all times work is being performed and shall be presented for inspection to the Director or the Engineer, their authorized representatives, or Inspectors assigned to the work, if so requested.

In general, no permits will be issued between December 1st and April 1st. After November 15th or should the weather turn cold, air temperature below 32° F for more than twelve (12) hours per day for five (5) consecutive days, issuance of permits will be suspended before December 1st. After March 1st, should the weather turn warm, air temperature above 32° F for more than eighteen (18) hours per day for five (5) consecutive days, issuance of permits will be resumed prior to April 1st. In case of an extenuating circumstance, only the Engineer, himself, may order a permit issued after the closing date for the season. All construction on all regularly issued permits shall cease on December 15th, at this time, all uncompleted work shall be made safe and passable, as ordered by the Engineer, and shall be maintained so by the contractor until completion in the spring. Temporary construction and maintenance will be provided by the contractor.

1.3 CONTRACTOR'S RESPONSIBILITY

The contractor shall guarantee the work done for sidewalk and curb work under each permit issued him for a period of one (1) year after completion and final acceptance against any failure caused by defective materials or defective workmanship. The contractor shall guarantee the street repair work for all excavations under each permit issued him for a period of two (2) years after completion of the permanent patch against any failure caused by defective materials or defective workmanship. The contractor will at any time during this period, upon notification in writing from the Engineer and without expense to the Town, immediately execute all repairs which may be necessary as determined by the Engineer.

The contractor shall cooperate with the various departments of the Town having jurisdiction or interests in certain features of the work. He shall schedule and conduct his work so as to comply with the regulations of these departments and shall have authorized representatives on the job whenever work is being done. Twenty-four hours before commencing work in a "Critical Area" which requires the detour of traffic or the closing of one lane, the contractor shall be responsible for notifying the Vernon Board of Education, Public Works Department, Police Department, and Fire Department as to the location and nature of the proposed work. He shall also be responsible for complying with any and all directives they may issue at that time. Should there be traffic control signs, signals or parking meters within the work site that will require removal or relocation, the Contractor shall call the Director and request instructions. Any proposed work adjacent to a town tree (one within the street line) should be reported to the Town Tree Warden at Public Works.

The contractor shall give the work his constant attention to facilitate the progress thereof and shall cooperate and promptly comply with all orders or directions of the Engineer and/or Director. In the absence of the contractor, there shall be an authorized representative on the project to accept all orders and directions from the Engineer and/or Director. He shall have full authority to promptly carry out such orders and directions within the terms of the specifications and to supply such tools, labor equipment materials and incidentals as may be required.

The contractor shall be responsible for notifying the owner of any utility appurtenances he may encounter, above or below ground that he may have damaged or that may require adjustment or relocation. The contractor shall cooperate with the owner of said utility and schedule and conduct his work so as not to interfere with or hinder the completion of their work.

The contractor shall conduct the work at all times in such a manner as to insure the safety and least possible obstruction to traffic. The convenience and safety of the general public and of the residents along and adjacent to the street shall be provided for in an adequate and satisfactory manner. Materials stored within the street shall be placed so as to cause as little obstruction to the public as possible under the conditions. No street or section of the street shall be closed without written permission of the Engineer and the Chief of Police. The safety provisions of applicable laws, building and construction codes and safety codes approved by the State Labor Commissioner shall be observed. The contractor shall provide sufficient suitable barricades to exclude and prevent injury to pedestrians, vehicles and animals. He shall also provide a sufficient number of yellow warning lights on or near the work from twilight in the evening until sunrise. If required by the Engineer, Director or Chief of Police, the contractor shall provide, and maintain temporary signs for the control of traffic and flagmen or uniformed policemen to supplement traffic control.

1.4 INSPECTION OF THE WORK:

The Engineer and/or his duly-authorized representatives shall be the judge of the character, nature and fitness of all the work done and all the material furnished. He shall decide as to the meaning, intent and performance of these specifications. The entire work shall be done under his supervision and to his satisfaction and his decisions upon all questions relating to said work shall be binding upon the contractor.

1.5 LINE AND GRADE:

The Engineer may furnish lines, grades and measurements necessary to layout the work. Such stakes or marks as the Engineer may set for his own or the contractor's guidance shall be preserved by the contractor. If such stakes or marks are carelessly destroyed by the contractor, the cost of replacing such stakes may be charged against the contractor. The contractor may be required to set line and grade.

The contractor shall be responsible for making a request for line and grade at the Engineering Department at least forty-eight (4)8 hours prior to beginning any work which may require line and grade. The line and grade will be required for all curb work, construction of new sidewalks and drives and replacement or resetting of existing sidewalks and curbs.

The contractor shall not commence work until such line and grade has been marked. He shall carefully work to the lines and grades using all stakes and marks furnished. Should any stakes or marks be moved or lost, or if any doubt exists in the contractor's mind about the correctness of any stake or mark he shall request the Engineer to replace or verify these points. He shall not proceed with the work until the replacement or verification has been made.

The contractor shall exercise extreme care not to damage, disturb or bury any town monuments which have been set at street corners or at angles in the street lines. If any monument is disturbed, damaged or covered over, it shall be the duty of the contractor at his expense to correct these conditions, as directed by and subject to the supervision of the Engineer.

1.6 URGENT WORK:

If, in his judgment, traffic conditions, the safety or convenience of the traveling public or the public interest require that the excavation work be performed as emergency work, the Director of Public Works shall have full power to order that a crew of men and adequate facilities be employed by the permittee up to twenty-four (24) hours a day to the end that such excavation work may be completed as soon as possible. In the event the contractor is unable to perform required emergency work, the Director may call in Town employees to take the necessary measures to ensure the roadway is passable and all associated costs will be billed to the contractor.

1.7 EMERGENCY ACTION:

Nothing in these rules shall be construed to prevent the making of such excavations as may be necessary for the preservation of life or property or for the location of trouble in conduit or pipe, or for making necessary repairs, provided that the person making such excavation shall apply to the Engineer for such a permit on the first working day after such work is commenced.

The person engaged in emergency action shall notify the Engineer, Director, the Police Department, and the Fire Department at the start of the emergency work.

1.8 RELOCATION AND PROTECTION OF UTILITIES:

The permittee shall call the Connecticut Underground Utility Protection Plan (C.U.U.P.P.) (1-800-922-4455) a minimum of three (3) working days prior to starting his excavation and shall write the assigned C.U.U.P.P. number on the Permit application. The permittee must call to renew the number every 30 days for it and the permit to remain valid.

The permittee shall not interfere with any existing utility without the written consent of the Engineer and the owner of the utility. If it becomes necessary to relocate an existing utility, this shall be done by its owner and the cost of such work borne by the permittee. The permittee shall support and protect by timbers or otherwise all pipes, conduits, poles, wires, or other apparatus which may be in any way affected by the excavation work, and do everything necessary to support, sustain and protect them under, over, along or across such work. In case any said pipes, conduits, poles, wires or apparatus should be damaged, and for this purpose pipe casing or other encasement devices are to be considered as part of a substructure, they shall be repaired by the agency or person owning them and the expense of such repairs borne by the permittee. The permittee shall be responsible for any damage done to any public or private property by reason of the breaking of any water pipes, sewer, gas pipe, electric conduit or other utility.

1.9 PROTECTION OF ADJOINING PROPERTY:

The permittee shall at all times, and at his own expense, preserve and protect from injury any adjoining property by providing proper foundations and taking other measures suitable for the purpose. The permittee shall, at his own expense, shore up and protect all buildings, walls, fences or other property likely to be damaged during the progress of the excavation work and shall be responsible for all damage to public or private property or highways resulting from its failure to properly protect and carry out said work. The permittee shall not remove, even temporarily, any trees or shrubs which exist in planting strip areas without first obtaining the consent of the Tree Warden.

1.10 CONSTRUCTION MATERIALS:

Construction materials on the site shall be limited in quantity and space occupying area so as to not unduly hinder and block the use of the street.

1.11 CLEARANCE OF VITAL STRUCTURES:

The excavation work shall be performed and conducted so as not to interfere with access to fire hydrants, fire stations, fire escapes, water or gas gates, underground vaults, catch basins and all other vital equipment as designated by the Engineer and/or the Director.

The permittee shall maintain all gutters free and unobstructed for the full depth of the adjacent curb and for at least one foot in width from the face of such curb at the gutter line. Catch basins shall be kept clear and serviceable.

The permittee shall make provisions to take care of all surplus water, muck, silt, or other run-off pumped from excavations and shall be responsible for any damage resulting from his failure to so provide.

1.12 NOISE:

Each permittee shall conduct and carry out excavation work in such manner as to avoid unnecessary inconvenience and annoyance to the general public and occupants of neighboring property. Between the hours of 8:00 P.M. and 7:00 A.M. he shall not use, except with the express written permission of the Director or in case of an emergency as herein otherwise provided, any tool, appliance or equipment producing noise of sufficient volume to disturb the sleep or repose of occupants of the neighboring property.

1.13 TRENCHES:

The maximum length of open trench permissible at any time shall be in accordance with existing ordinances or regulations including OSHA regulations or as may be specified by the Engineer. No greater length shall be open for pavement removal, excavation, construction, backfilling, patching and all other operations without written permission of the Engineer.

1.14 EXCAVATED MATERIAL:

All material excavated from trenches or excavations shall be removed from the site and legally disposed of except in rare cases where material is suitable for part of the backfill, however, permission must be granted by the Engineer prior to placement of any such material.

1.15 DUST CONTROL AND CLEAN UP:

As the excavation work progresses, all streets shall be thoroughly cleaned of all rubbish, excess earth, rock and other debris. The permittee shall take necessary precautions to prevent and avoid dust and to keep the streets clean each day. All clean up operations shall be accomplished at the expense of the permittee and shall be carried out to the satisfaction of the Engineer and/or Director.

1.16 PROMPT COMPLETION OF WORK:

After an excavation is commenced, the permittee shall prosecute with diligence and expedience all excavation work covered by the excavation permit and shall promptly complete such work and restore the street to its original condition or as near as may be, so as not to obstruct the street or travel thereon more than is reasonably necessary.

1.17 MAINTENANCE AND PROTECTION OF TRAFFIC:

The Chief of Police shall prescribe all conditions for maintenance and protection of traffic for each project. As a rule, whenever the excavation requires the closure of one lane, a dedicated traffic person will be required to direct traffic until two-way traffic can resume. The traffic person can be a flagman employed by the contractor, or a Town police officer.

1.18 GENERAL CURB, WALK, DRIVEWAY AND AREAWAY REQUIREMENTS:

General Curb Requirements: Unless specifically ordered by the Engineer, no concrete curb or combined curb and gutter shall be repaired, recapped or reset. All defective sections shall be removed and replaced with new or used granite curb as herein specified.

General Sidewalk Walk Requirements: The sidewalk and any other paved area between the curb and street line shall rise from the outer edge (curb side) to inner edge at a rate of three-eights of an inch (3/8") to the foot. This requirement may be varied to meet special conditions only on order of the Engineer. All new sidewalks shall be monolithic concrete walk on approved foundation. If a portion of a sidewalk frontage has been replaced by the Town with monolithic concrete walk on satisfactory existing foundation due to curb repair or moving back of curb corners, etc., the abutting property owner may replace the balance of the walk with new monolithic concrete of required thickness on new foundation.

General Driveway Requirements: The minimum width of driveways shall be thirteen feet (13') between curb openings measured at gutter, and the maximum width shall be thirty feet (30') without written permission of the Engineer. The island between two adjacent driveways shall be not less than three feet (3') measured on the curb line without written permission of the Engineer. No driveway will be constructed in any portion of the arc of any curb corner except with written permission of the Engineer. Bituminous concrete driveway ramps shall be constructed in conforming residential zones only and then with the written permission of the Engineer. All existing granite, bituminous concrete curb, concrete

curb or combined curb and gutter shall be removed in the construction or reconstruction of bituminous concrete ramps. Curb cut for bituminous ramp shall be cut square. The opening shall be twenty inches (20") on each side wider than the proposed ramp at gutter line. A shoulder of bituminous concrete shall be constructed with the ramp twenty inches (20") wide rolling down from the top of curb to the finished ramp grade at gutter line. New eight inch (8") reinforced cement concrete drive aprons may be installed against existing eight inch (8") thick reinforced cement concrete walk provided the walk is in good condition and true to line and grade and with the permission of the Engineer. Sidewalks converted to use as driveway ramps shall not be accepted. The existing walk and the new drive, ramp shall be doweled.

Areaway: Prior to repair of a sidewalk which is over or the covering of an areaway complete plans by a Professional Engineer shall be submitted to the Engineer for his review and approval. No work may be started until the Engineer has given written approval and a permit obtained.

Wheelchair Ramps: Wheelchair ramps when ordered constructed or repaired shall have a curb to curb opening of fourteen feet (14') with a clear opening between shoulders of forty inches (40"). The header shall be flush with the gutter. The header shall have the same foundation and extend to same depth as the adjacent curb stones (min. 18" deep). The specification for concrete wheelchair ramps shall meet the same specifications as the eight inch (8") reinforced concrete driveway ramps.

SECTION 2.0

MATERIAL SPECIFICATIONS

2.1 VERTICAL GRANITE CURB:

All vertical granite curb supplied for use within a town street or on town property shall conform to Section M.12.06 of the Standard Specifications and to the following:

Dimensions:

Straight curb shall be six inches (6") by eighteen inches (18"), (or as ordered by the Engineer). Depth shall be nominal depth plus or minus one inch (1"). Minimum length to be six feet (6'), except for closures which are to be not less than four feet (4'). Minimum width at bottom to be nominal width minus one inch (1") for two thirds the length with an absolute minimum of minus two inches (2") for the remaining one third.

All curbs to be set on radius of seventy-five feet (75') or less shall be cut to the curve. Depth shall be eighteen inches (18") plus or minus one inch (1"). Minimum length to be feet (4'), minimum width at bottom to be five inches (5") for two thirds the length with an absolute minimum of four inches (4") for the remaining one third.

Straight curb to be set on radius over 75 feet to 500 feet shall be 6 inches by eighteen inches (18") with ends trimmed so that face and top joint fits properly. Depth to be eighteen inches (18") plus or minus one inch (1"), minimum length to be feet (4'), maximum length to be 6 feet. Minimum width at bottom to be five inches (5") for two thirds the length with an absolute minimum of four inches (4") for the remaining one third.

Finish:

The curbstone shall have a top surface free from wind and drill holes, it shall be sawed to an approximately true plane, and shall have no projections or depressions greater than one-eighth inch (1/8"). The front and back arris lines shall be straight and true with no variation from a straight line greater than one-eighth inch (1/8"). On the back surface there shall be no projection for three inches (3") down which would fall outside a batter of four inches (4") in twelve inches (12") from the back arris line. The front face shall be at right angles to the plane of the top or battered not more than one inch (1") in twelve inches (12"), and shall be quarry split or sawn, free from drill holes in the exposed face. The front face shall have no projections greater than three quarters of an inch (3/4") or depression greater than one half inch (1/2") measured from the vertical plane of the face through the top arris line for a distance of eight inches (8") down from the top. For the remaining distance there shall be no projections or depressions greater than one inch (1") measured in the same manner. The arris lines at the ends shall be pitched with no variation from the plane of the face greater than one-eighth inch (1/8"). The ends of all stones shall be square with the planes of the top and face, and so finished that when the stones are placed end to end as closely as possible, no space more than one half inch (1/2") shall show in the joint for the full width of the top and down on the face for eight inches (8"). On curbstones having a length of six feet (6') or more, the remainder of the end may break back not over eight inches (8") inches, on shorter curbstones, they shall not break back more than six inches (6"). The bottom surface shall be sawn or quarry split to an approximately true plane. Half drill holes not larger than one-quarter inch (1/4") radius will be permitted in the arris line of the back. Front arris line may be rounded to a radius not over one-half inch (1/2"). If sawn, the curbstone shall be thoroughly cleaned of any iron rust or iron particles.

Used Curb:

When ordered by the Engineer, the contractor may provide himself or be supplied by Public Works with suitable used curb salvaged from previous work. The used curb shall be in good condition and shall generally meet the above specifications for new curb. Each individual piece will be inspected and subject to the approval of the Engineer.

2.2 CURB, JOINT SEALANT:

Joints between the curb stones or between the pieces of precast concrete curb shall be filled with a material equal to Sikaflex 1C polyurethane sealant and a foam backer rod. Mortar or grout will not be allowed. The sealant shall be a moisture-cured, one component, polyurethane-based elastomeric sealant and shall offer adhesion and elasticity from 0 to 100° F temperature range. It shall resist fuel, mineral oil and dilute minerals. It shall be odorless and non-staining. The sealant shall be a non-sag grade and the color shall be limestone, unless another color is specified by the Engineer. It shall be purchased in cartridges so as to be applied with a caulking gun.

2.3 PORTLAND CEMENT CONCRETE:

Portland cement concrete shall be Class "F", having a minimum strength of 4,000 psi at 28 days, and shall meet the requirements of Section M.03.01 of the Standard Specifications.

Expansion Joint: Expansion joint shall be non-extruding premoulded joint material consisting of a cork granule base in a watertight asphalt binder between two layers of asphalt-impregnated paper ("Kupcork" as manufactured by Presstite-Keystone Engineering Products Company or "Kork-Pac" as manufactured by Servicised Products Company or approved equal.) The expansion joint material shall be 5" wide for 5" sidewalks and shall be 8" wide for 8" driveway ramps and 8" sidewalks.

Welded Wire Mesh Reinforcing: Wire mesh reinforcing shall be cold-drawn steel wire conforming to the requirements of AASHO M-32 and M-55 and shall be 6x6x8/8.

Dowels: Dowels shall be intermediate grade steel conforming to AASHO M-31. Dowels shall be smooth and shall be 5/8" diameter by 2' long.

Curing Materials: Waterproof paper shall be double sheet, asphalt cemented Kraft paper reinforced in both directions and conforming to the requirements of AASHO M139.

2.4 BITUMINOUS CONCRETE:

Bituminous concrete used with respect to these regulations shall meet the requirements of Article M.04, Class 1 and Class 2 of the Standard Specifications. Class 1 shall be used for the binder course and Class 2 shall be used for the surface course.

2.5 PROCESSED AGGREGATE BASE:

All processed aggregate shall conform to the requirements of Section M.05.01 of the Standard Specifications.

2.6 CRUSHED TRAP ROCK:

All crushed trap rock shall conform to the requirements of Section M.01.01 of the Standard Specifications.

2.7 BANK RUN GRAVEL:

All bank run gravel shall conform to the requirements of Section M.02.01.1 of the Standard Specifications.

2.8 TOPSOIL:

All topsoil shall conform to the requirements of Section M.13.01 of the Standard Specifications and shall be a minimum of four inches (4") in thickness.

Any material delivered to the project which does not meet specifications, or which has become mixed with undue amounts of subsoil during any operation at the source or during placing or spreading, will be rejected and shall be replaced by the Contractor with acceptable material.

2.9 DETECTABLE WARNING STRIPS:

All handicap ramps shall have embedded and flush with the concrete surface, a warning strip with truncated domes equal to Armor-Tile ADA Sound amplifying detectable/tactile warning strip installed per ADA and the manufacturer's recommendations. They shall be brick red in color (Federal Color No. 22144), unless otherwise ordered by the Engineer.

2.10 INSPECTION, SAMPLING AND TESTING:

All material shall be subject to inspection before delivery, by a member of the Engineering Department. The Engineer reserves the right to reject at any time material that he feels does not meet the specifications.

The Engineering Department will make or have made tests on the material to determine conformance to specifications. Samples will be taken from either the supplier's stockpile or from material already delivered, as circumstances require.

Procedures for sampling and testing the material shall conform with the AASHO or ASTM methods listed herein using the latest revision existing at the date of the testing.

The supplier will be required to make available to the Engineering Department the proper equipment (screens at least 12 inches square and mechanical shaker) in good condition for making tests.

3.1 VERTICAL GRANITE CURB:

Excavation:

For the installation of new or used curb on new foundation the contractor shall excavate at least eighteen inches (18") wide but not more than thirty inches (30") wide and exactly thirty-six inches (36") below and parallel to the top of the new curb. Existing granite curb shall be carefully removed and stacked convenient for removal by Public Works if so ordered by the Engineer. When existing curb is to be reset, the contractor shall excavate on both sides of the curb, carefully remove the curb and store it adjacent to the trench, he shall be responsible for replacing any curbstones damaged by his negligence. When curbing is to be set or reset adjacent to existing street paving, the contractor shall excavate at least twelve inches (12") but not more than eighteen inches (18") in front of the curb line. The existing pavement surface and base shall be cut to a neat true line by sawing or cutting with a pavement breaker. The contractor shall exercise care in excavating so as not to break the pavement back of this line. Where the distance between the back of curb and the sidewalk is twelve inches (12") or less, the contractor shall excavate by hand to avoid damaging the sidewalk. Trench for curb to be set on radius shall be exactly thirty-six inches (36") below and parallel to the finished grade of the curb. Cement concrete walk laid against curbing to be reset shall be removed to the nearest longitudinal joint providing a neat clean line. Bituminous concrete paving behind the curb shall be cut to a neat true line on the edge of excavation. No excavated material shall be salvaged for reuse on the project except granite curb and suitable topsoil and only if ordered by the Engineer. Ledge rock encountered in the trench shall be removed to six inches (6") below the bottom of curb by suitable air tools only.

Foundation:

All foundation material under straight curb and for the bottom course of curb set on radius shall be processed aggregate conforming to Section 2.5 of these specifications. Foundation under straight curb shall be placed in six inch (6") layers, be compacted with at least two passes of a motor driven vibratory compactor.

Radius curb shall be set on a Portland Cement Concrete foundation conforming to Section 2.3 of these specifications. The bottom six inches (6") of the trench shall be filled with processed aggregate and compacted with at least two passes of a motor driven vibratory compactor. The trench shall then be filled to the level of the bottom of the curbing with the above-specified mix in the very dry state. Curb may be held true to line and Concrete shall then be filled in on the sides (see backfill) producing a monolithic construction with the concrete below the curb. For the purpose of this specification all radius curbs with a radius of seventy-five feet (75') or less shall be cut to specified radius and have a concrete foundation. For radii of seventy-five feet (75') to five hundred feet (500') four-foot (4') curb lengths shall be used, and set on the standard straight curb foundation.

Setting the Curb:

All curb shall be handled with care to prevent damage, only canvas, nylon or fiber rope slings may be used. *Chains or wire rope slings will not be allowed*. Curb shall be stored as near to the proposed location as possible, it shall be placed with the top surface up, and suitable wood blocking placed at the third points of this section. Curb sections shall be placed with space between them sufficient to prevent damage by the contractor, and shall not be piled on top of each other. Curbstones shall not be stored on any paved surface unless authorized by the Engineer. The contractor shall be responsible for repair of any damage to the surface upon which curb has been stored. Straight curb sections shall be set on the completed foundation, wedged to line and settled to grade with a heavy wooden hand hammer. Steel tools of any kind shall not be used directly on the curb in setting it to line and grade. Curb sections shall be forced together so that no joint between adjacent curbstones shall be more than one half inch (1/2"). If required to achieve this fit, the contractor shall chip off any projections on the ends of the curbstone that prevent the required fit. If ordered by the Engineer,

the contractor shall trim damaged ends of curbstones and cut closure pieces. Tolerance for the cut ends to be as specified for ends of new curb. A maximum open joint of one half inch (1/2") be left between curbstones and catch basin headers.

Trim and Cut Curbstones:

This item shall include trimming damaged ends on existing curbstones and cutting existing curbstones to a shorter length, both trimming and cutting to produce a new end which is square with the planes of the top and face of the curb.

The ends shall be finished so that when stones are placed end to end as closely as possible, no space more than one-half inch wide shall show in the joint for the full width of the top and down the face for nine inches (9"). The remainder of the joint may break back not more than four inches (4") from the joint. The inspector may require the cut to be made with the stone in place in the ground.

When cutting a curb the section being removed must be cut with a saw or suitably scored with a tracing chisel and hammer on face and top of curb, two to three holes will be drilled into face of curb along score mark and curb split with feather and wedges. The portion of curb cut off shall be kept to a minimum when cutting and trimming.

If in making a cut, the contractor through negligence damages the curb so as to make it unusable, the contractor shall furnish, at no cost to the town, a piece of suitable curb cut to proper length to replace the damaged curb.

Seal Joints:

The joints of the curbing shall be filled with a polyurethane sealant and foam backer rod as described in Section 2.2. The top of the joint and front of the joint shall be totally filled prior to repairing the pavement. The sealant shall be applied to below the top of pavement grade.

Backfill:

Backfill shall be placed as soon as possible after the setting of the curb. Care shall be exercised to prevent displacement of the curb. Backfill shall be placed equally on both sides of the curb to required distance below gutter grade. For straight curb backfill shall be processed aggregate or bank run gravel as specified in Sections 2.5 or 2.7. Backfill shall be placed in six-inch (6") maximum layers and compacted with not less than two (2) passes of a motor driven vibratory compactor. Behind the curb processed material backfill shall be placed and compacted to five inches (5") below top of curb. In front of the curb where no concrete pavement base exists processed material backfill shall be placed and compacted to three and one half inches (3 ½") below gutter grade. Where concrete pavement base exists, processed material backfill shall be placed and compacted to eleven and one half inches (11½") inches below gutter grade.

The concrete pavement base shall conform to requirements of concrete foundation as hereinbefore specified, it shall be eight inches (8") thick and placed to three and one half inches (3 ½") below gutter grade. Processed material backfill behind the curb shall be placed only to twelve inches (12") below top of curb until the concrete pavement base has been placed and hardened then the backfill shall be completed as required. For curb set to radius all backfill shall be cement concrete as hereinbefore specified for cement concrete foundation. Top of cement concrete backfill behind the curb shall be six inches (6") below top of curb, in front top of concrete backfill shall be three and one half inches (3 ½") below gutter grade. The edge of existing concrete pavement base shall be cleaned of all loose material and wet down just before placing concrete backfill. Top of concrete backfill shall receive a rough wood float finish.

Pavement, Walk and Seeding Repairs:

The edge of the existing pavement surface shall be trimmed back twelve inches (12") to a neat true

line and shall be coated with hot asphalt. The face of the curb below gutter grade shall be coated with hot asphalt. The two inch (2") compacted thickness of bituminous concrete binder (Class 1) shall be placed and then the two inch (2") compacted thickness of bituminous concrete wearing surface (Class 2) shall be placed. Bituminous mix shall be as specified in Section 2.4. The finished patch shall match the gutter grade and the top of the existing pavement. The patch and the existing pavement shall be sealed with hot asphalt. Concrete sidewalk behind the curb will be replaced as specified in Section 3.2 of these specifications. Bituminous paving behind the curb will be replaced as specified in Section 3.4 of these specifications. Where there is no walk or paving directly behind the curb, the top four inches of the trench shall be filled with new or existing topsoil. The surface shall be smoothly graded to match the existing ground; seed shall be evenly spread at the rate of 5 pounds per 1000 square feet and raked in and the surface lightly tamped. The contractor should take notice that the summer months are not good for grass growing and that he is responsible for a good stand of grass during the next growing season.

3.2 5-INCH PORTLAND CEMENT CONCRETE SIDEWALK:

Excavation:

All proposed concrete walks shall be excavated fourteen inches (14") below and parallel to the finished grade of the new walk. Excavation shall extend three inches (3") minimum and six inches (6") maximum outside the edges of the proposed walk. Existing flagstone or concrete walk shall be removed, as part of this work. Ledge rock encountered within twelve inches (12") of the finished walk grade shall be removed to twelve inches (12") below finished grade. All removal shall be by suitable air tools only. After completion of excavation and prior to placing of foundation material, the sub-grade shall be compacted by at least two passes of a motor driven vibratory compactor. Should the sub-grade appear soft and yielding, this material shall be removed to firm ground, as ordered by the Engineer. The sub-grade, if stable, shall then be re-compacted as hereinbefore specified. No excavated material shall be salvaged for reuse on the project except suitable topsoil and only if ordered by the Engineer. No broken flagstone or concrete shall be used in the foundation.

Foundation:

All foundation material under cement concrete walk shall be processed trap rock conforming to Section 2.5 of these specifications. The processed material shall be placed in 6-inch layers the full width of the excavation. Each course shall be compacted to the satisfaction of the Engineer, with at least two passes of a motor driven vibratory compactor. Additional fine material shall be added to the top course to fill any voids that may have developed during compaction and to bring the completed foundation to true line and cross section 5 inches below and parallel to the finished grade of the walk.

Forms:

Forms shall be of metal or wood, straight, free from warp and of sufficient strength to resist springing from the pressure of the concrete. If of wood, they shall be of 2-inch by 6-inch smooth surfaced plank except that at sharp curves thinner material may be used. If of metal, they shall be of approved section and shall have a flat surface on the top. Forms shall be of a depth equal to the depth of the walk. Forms shall be securely staked, braced and held firmly to the required line and grade. Special care shall be taken to maintain the proper shape of all curves. Forms shall remain in place for twenty-four (24) hours after placement of concrete. No stakes or bracing shall project above the top of the form. Forms shall be sufficiently tight to prevent leakage of mortar. All forms shall be cleaned and oiled before concrete is placed against them.

Sheet metal templates one quarter inch (1/4") thick of the full depth and width of the walk shall be placed at every expansion joint or as ordered by the Engineer. If concrete is placed in alternate sections these templates shall remain in place until concrete has been placed on both sides of the templates. As soon as the concrete has obtained its initial set the template shall be removed. For

walks over six feet (6') wide suitable longitudinal screed supports shall be used, so that maximum distance between screed supports and form shall not exceed six feet (6'). They shall be set to and firmly held at correct grade, and removed prior to final finishing.

Placing of Concrete:

The contractor shall give the Engineering Department a twenty four (24) hour notice before placing concrete. All dowels, expansion joint and other embedded material items shall be in place and all necessary placing and finishing tools and all curing and protection materials shall be on the job prior to commencement of concreting. Before the concrete is placed, the sub-grade shall be thoroughly dampened so that it is moist throughout, but without puddles of water. Concrete shall be placed as near to its final position as practicable, and precautions shall be taken not to overwork the concrete while it is still plastic. The concrete shall be thoroughly spaced along the forms or screeds. The concrete shall be placed in one five inch (5") thick course and struck off by use of a suitable screed resting on the forms or screed support to the required grade and cross section. All concrete mixes shall conform to Section 2.3 of these specifications.

Finishing:

No finishing operation shall be performed while free water is present, finishing operations shall be delayed until all bled water and water sheen has left the surface and the concrete has started to set. The practice of dusting the surface with cement to promote drying will not be permitted. After water sheen has disappeared, all exposed walk edges and edges on each side of expansion joints shall be finished with a one-quarter inch (1/4") radius edging tool. Transverse dummy joints shall be formed by cutting a slot in the concrete one inch (1") deep. The slot may be cut by a one inch (1") deep T-bar forced into the fresh concrete or by a one inch (1") bit jointer held against a straight edge. After the concrete has partly hardened, the joint shall be edged with a jointer have a one inch bit (1") and one-quarter inch (1/4) fillets, held against a straight edge to make a clean straight joint. All other dummy joints in the walk shall be treated as above specified for transverse dummy joints.

All completed dummy joints shall be one inch deep. After edging and jointing operations, the surface shall be floated with a wood or steel float. In very warm weather care shall be taken to prevent final set by shading and wetting until all finishing operation have been performed. If necessary, all tooled joints and edges shall be rerun after floating to maintain uniformity. After floating the surface shall be brushed by drawing a soft bristled push broom with a long handle over the surface of the concrete to produce a non-slip surface. A rain spattered finish will not be acceptable. Forms shall not be stripped for at least twenty-four (24) hours after completion of finishing. Care shall be taken not to damage the green concrete during stripping of forms.

Joints:

Transverse dummy joints shall be constructed at a longitudinal spacing equal to the width of the walk but not over five feet (5') apart or to match adjoining walk. Transverse expansion joints shall be constructed to replace every third dummy joint and at change of walk thickness. Transverse expansion joints shall be one-half inch (1/2") inch thick by five inches (5) deep pre-molded joint material as specified in Section 2.3 of these specifications, and shall have five-eighths inch (5/8") round by twenty-four inches (24") long dowels spaced two feet (2') center to center or not more than twelve inches (12") from the edges of the walk. One end of each dowel shall be set in a twelve inch (12") long plastic sleeve, or dipped into a lubricant grease to prevent concrete from adhering to the dowel. (5/8 inch ID plastic pipe may be used for this purpose.) Deformed reinforcing bars will not be allowed. Expansion joints, one-half inch (1/2") by five inches (5") as hereinbefore specified, shall be used between the walk being constructed and existing concrete walks, entrance walks, building foundations, retaining walls, light pole bases, vaults, manholes and all similar structures. Utility poles, hydrants, fire alarm boxes, gate boxes and similar installations located in the walk area shall be separated from the main walk by dummy joint or expansion joints located within twelve inches (12") of any structure in the walk.

Curing:

Immediately following the final finishing and as soon as possible without marring the surface, the concrete shall be covered with water-proof paper conforming to Section 2.3 of these specifications. The waterproof paper shall extend at least twelve inches (12") beyond the edge of the walk and, if required, shall be lapped a minimum of six inches (6"). The waterproof paper shall be held down on all edges and lapped by continuous wood planks or piles of sand. Use of rocks or broken concrete will not be permitted. At the end of at least seventy two (72) hours paper shall be removed.

Cold Weather Concrete and Protection:

No cement concrete shall be placed when the air temperature is 32° F or below. Concrete may be placed when the air temperature is 33° F to 40° F only when suitable protective measures are taken. The following measures to be taken are the minimum required but not necessarily all the measures that may be required by the Engineer. Mixing water and aggregate shall be heated to provide mixed concrete at the job site having a temperature not less than 60° F, nor greater than 90° F. An accelerator as hereinbefore specified shall be added. The sub-grade shall not be frozen, having been constructed with non-frozen materials and protected from freezing, snow or rain by a suitable cover or insulation. The completed concrete shall be maintained at 55° F for four (4) days. It shall be covered with waterproof paper as specified under "Curing" in this Section, then an insulating blanket shall be placed over the paper, or minimum of 6 inches of loose hay and a complete covering of waterproof paper securely fastened down on the edges and lapped. This protection shall be provided for a minimum of four (4) days after the day the concrete was poured. Should the concrete be placed when the air temperature is over 40° F, but temperatures may in the opinion of the Engineer, go below 35° F during the four (4) day period the contractor shall provide extra covering as specified above.

Backfill and Seeding Repairs:

Upon completion the walk and stripping the forms the edges of the walk shall be backfilled with new topsoil or if acceptable, the existing topsoil. The surface shall be smoothly graded to match the walk and the existing ground seed shall be evenly spread at the rate of 5 lbs. per 1000 sq. feet and raked in and the surface lightly tamped. The contractor should take note that the summer months are not good for grass growing and that he is responsible for a good stand of grass during the next growing season. Bituminous paving to be repaired or constructed adjacent to the walk shall conform to Section 3.5 of these specifications.

3.3 8-INCH REINFORCED PORTLAND CEMENT CONCRETE WALK AND DRIVEWAY APRON:

Construction of 8-inch concrete walk and driveway shall conform to all provisions of Section 3.2, 5-inch concrete walk except as follows:

Excavation:

Excavation shall be seventeen inches (17") below and parallel to finished grade, and the maximum depth of removal of soft yielding material shall be thirty-two inches (32") deep. Excavation of header for driveway shall be thirty-six inches (36") below finished shoulder grade, between eighteen inches (18") and thirty inches (30") wide. The excavation shall be centered on the proposed header. Cutting and removal of the existing curb, combined curb and gutter, sidewalk or driveway shall be part of this excavation. Removal of existing street paving and base shall be specified in Section 3.1.

Foundation:

Completed foundation shall be eight inches (8") below and parallel to finished grade. Foundation and backfill of header shall conform to requirements for straight curb as specified in Section 3.1.

Forms:

Forms shall be eight inches (8") deep minimum. A standard 2" x 8" will not be allowed. Forms for header shall be wood, 2" x 12" mortar tight and securely braced. Provided the inside face of the foundation is reasonably straight and true a form will not be required.

Wire Mesh Reinforcing:

All eight inch (8") concrete walks and drives shall be reinforced. Wire mesh reinforcing shall be welded steel, No. 8 wire spaced six inches (6") by six inches (6") both ways as specified in Section 2.3. The mesh shall be placed two inches (2") above top of gravel foundation grade and all adjacent sections of mesh shall be lapped eight inches (8") and tied together with wire spaced not over twenty-four inches (24") on centers to prevent displacement. The two inches (2") of concrete shall be struck off to a reasonably true grade prior to placing the wire mesh. Wire mesh, if supplied in rolls, shall be cut to the proper size and flattened out prior to placement in the concrete. Wire mesh reinforcing shall be bent into the header twelve inches (12") below the finished grade at the gutter and two inches (2") inside the back face of the header.

Placing of Concrete:

Concrete in the header shall be placed at the same time as the concrete in the driveway apron.

Joints:

Transverse and longitudinal dummy joints one inch deep shall be placed in the surface of the driveway apron as shown on the typical detail plan. Transverse doweled expansion joints shall be placed in the 8-inch walk. Transverse doweled expansion joints shall be placed between all 8-inch walk or 8-inch drive and 5-inch walk. Expansion joint material 1/2 inch thick by the depth at the curb shall be placed between the drive shoulder and the existing curb.

Backfill, Pavement and Seeding Repairs:

Street paving in front of the driveway shall be repaired as specified in Section 3.1 of these specifications.

3.4 DETECTABLE WARNING STRIP:

All handicap ramps shall have a detectable warning strip with truncated domes installed per ADA and the manufacturer's recommendations. The factory-installed plastic sheeting must remain in place during the entire installation process to prevent the splashing of concrete onto the finished surface of the tile.

Tiles can be cut to custom sizes, or to make a radius, using a continuous rim diamond blade in a circular saw or mini-grinder.

When preparing to set the tile, it is important that no concrete be removed in the area to accept the tile. It is imperative that the installation technique eliminates any air voids under the tile. Holed in the tile perimeter allow air to escape during the installation process. Concrete will flow through the large holes in each embedment flange on the underside of the tile. This will lock the tile solidly into the cured concrete.

Immediately after placement, the tile elevation is to be checked to adjacent concrete. The elevation and slope should be set consistent with contract drawings to permit water drainage to curb as the design dictates. Ensure that the field surface of the tile is flush with the surrounding concrete and back of curb so that no ponding of water is possible on the tile at the back side of the curb.

While the concrete is workable, an edging tool shall be used to create a finished edge of concrete, then a steel trowel shall be used to finish the concrete around the tile's perimeter, flush to the field level of the tile. Once the concrete is flush, the surface can receive a broom finish.

During and after the tile installation and the concrete curing stage, it is imperative that there are no walking, leaning or external forces placed on the tile that may rock the tile causing a void between the underside of the tile and the concrete.

Following the concrete curing stage, the protective plastic wrap is to be removed from the tile surface by cutting the plastic with a sharp knife, tight to the concrete/tile interface. If concrete bled under the plastic, a soft brass wire brush can be used to clean the residue.

3.5 BITUMINOUS CONCRETE PAVING ADJACENT TO SIDEWALKS:

Excavation:

Excavation for bituminous paving between curb and walk on new foundation as determined by the Engineer, shall be eleven inches (11") below and parallel to the finished grade, and shall extend a minimum of three inches (3") beyond any outside edge. After completion of excavation for all bituminous paving and prior to placing of foundation material the sub-grade shall be compacted with at least two passes of a motor driven vibratory compactor. No excavated material shall be salvaged for reuse on the project except suitable loam and only if ordered by the Engineer. No broken flagstone, cement concrete, curbing or bituminous material shall be used in the foundation.

Foundation:

All foundation under bituminous concrete paving shall be processed aggregate conforming to Section 2.5 of these specifications. The processed material shall be placed in six inch (6") layers the full width of the excavation. Each course shall be compacted to the satisfaction of the Engineer, with at least three passes of a motor driven vibratory compactor. (Water shall be added to each course as required for proper compaction.) The completed foundation shall be true to line and cross section, three inches (3") below for ramps and two inches (2") below for other bituminous paving and parallel to finished grade. The trench resulting from curb removal shall be backfilled with processed material as specified in Section 3.1.

Laying the Bituminous Mix:

All bituminous concrete mix shall conform to the requirements of Section 2.4 of these specifications. Bituminous concrete paving shall be constructed in one course, two inches (2") compacted thickness of walk and drive mix. Forms will not be required. The edge of existing bituminous paving will be cut back six inches (6") to a neat, true line. The edge of all existing cement concrete, bituminous paving and curbing abutting the new paving shall be painted with a coat of hot asphalt or emulsion, just before placing the new paving. The mixture shall be laid only when the foundation is dry, the air temperature is at least 50°F in the shade and when weather conditions are, in the opinion of the Engineer, suitable for the work intended. No bituminous concrete mix shall be placed between December 15th and April 15th without written permission of the Engineer. The mixture shall be distributed into place and spread uniform loose layer of such depth to give the required thickness after compaction. Compaction of each course shall be by a roller weighing not less than one ton, and by use of hand tamps on edges and areas inaccessible to the roller. The contractor shall have sufficient shovels, rakes, lutes, brooms, all steel tamps (min. weight 36 lbs.) and smoothing irons. Joints in the bituminous paving shall be kept to a minimum, should any be required the previously placed paving shall be cut back three inches (3") to a neat true line and the joint painted with a coat of hot asphalt or emulsion. The finished bituminous paving surface shall be flush with the existing curb, walk or drive, it is laid against. The edge of the new paving against existing curb, walk or driveway shall be sealed with hot asphalt or emulsion.

Pavement and Seeding Repairs:

Street paving repairs and seeding repairs shall be as specified in Section 3.1 of these specifications.

3.6 MISCELLANEOUS CONSTRUCTION:

Relaying Pavers, Flagstone or Cement Concrete Walk:

Both sides of the walk shall be excavated a minimum of three inches (3") wide and for the full depth of the walk. The individual slabs shall be raised sufficiently to allow removal or addition of foundation material as required. Care shall be taken not to damage the slabs. Additional foundation material shall be new clean sand or stone dust firmly compacted. The relayed walk shall be to correct line and grade, firmly bedded with no voids under the slabs. The contractor shall be responsible for resetting existing abutting slabs that do not meet the correct line and grade of a new walk that he has constructed, to eliminate any "stub toes".

Patching Walks, Driveways and Curbing:

The patch shall be either cement mortar or bituminous material as ordered by the Engineer or the property owner. The area of the cement concrete patch shall be roughened and cleaned of all loose and foreign material, and the edges shall be trimmed to a reasonably vertical face. Cement mortar patch material shall be a mixture of cement, washed sand and water. Areas to be patched with cement mortar shall be coated with a bonding agent or with a mixture of cement and water just prior to placing patch material. The mortar shall then be placed and struck off to a smooth surface level with the surrounding area. As soon as the mortar has set, waterproof kraft paper shall be placed over the areas for seventy-two (72) hours. All traffic shall be kept off patched areas for at least forty-eight (48) hours. Bituminous patch material shall be a Class 2 bituminous concrete. The area to be patched with shall be cut out and the base shall be thoroughly compacted. The bituminous concrete shall be laid so the compacted thickness shall be two inches (2"). The edge of the new paving against existing curb, walk or driveway shall be sealed with hot asphalt or emulsion.

3.7 STREET EXCAVATIONS:

Breaking through Pavement:

The use of hydrohammers or heavy-duty pavement breakers for breaking pavement is prohibited on all streets unless written permission is granted by the Engineer.

Cutting of bituminous pavement surface ahead of excavation is required to confine pavement damage to the limits of the trench.

Sections of sidewalks shall be removed to the nearest score line or approved saw cut edge.

Unstable pavement shall be removed over cave-outs and over breaks and the sub-grade shall be treated as the main trench.

Where previous cuts have been made adjacent to the new trench or excavation, extra care shall be taken to prevent the opening of existing joints and the settling of the pavement. Any and all damage to the existing pavement adjacent to the excavation, including existing patches, shall be repaired by the last person to excavate and at no cost to the town.

Pavement edges shall be trimmed to a vertical face and neatly aligned with the center line of the trench. Cut-outs outside of the trench lines must be normal or parallel to the trench line.

Excavations shall be made in open cut and no tunneling will be allowed except by special permission of the Engineer. Trenches and excavations shall be braced and sheeted as required by OSHA regulations.

Backfilling:

Excavated material shall not be used for backfill unless it consists of sand or gravel and the permittee has approval of the Engineer. Broken pavement, large stones, clay, roots, frozen material

and other debris shall not be used in the backfill. Backfill material shall consist of bank run gravel, or processed aggregate as approved by the Engineer and meeting the specifications of Sections 2.5 or 2.7 of these rules and specifications. Bank run gravel may be used from the bottom of the trench to a point nine and a half inches (9½") below the surface of the pavement. Only two inches (2") of processed aggregate is to be used in the top nine and a half inches (9½") of the excavation. Backfill shall be placed in layers with a maximum depth of six inches (6"). All backfill material shall be compacted to a minimum of 95% of the dry density achieved by the AASHO T-180 D, as modified by Section 2.14 of the Standard Specifications prior to the installation of permanent paving. The Town of Vernon reserves the authority to require that compaction tests certified by an independent laboratory, acceptable to the Town, be made at the expense of the permittee. No puddling will be allowed without written permission of the Engineer.

RESTORATION OF PAVEMENT

Temporary Surface Restoration:

A temporary surfacing of two inches (2") of Class 2 bituminous concrete shall be placed on the backfill material for a wearing surface. The permittee may use with the written approval of the Engineer "cold mix" when "hot mix" is unavailable because the asphalt plants are shut down. When "cold mix is used, the permittee is responsible for maintaining the patch throughout the winter and until a permanent repair can be made. Temporary paving of cuts shall be maintained in a safe and satisfactory condition by the permittee at all times. The failure of the permittee in doing this shall call for the revoking of his license. If the permittee is unable to respond to an unsafe condition with the patch, the Town Public Works Department will make all necessary repairs and submit a bill for all costs to the permittee.

Permanent Surface Restoration:

In permanent pavement restoration, paving shall be replaced with like pavement or as follows:

Base Type	Restoration
Gravel Base	6" processed aggregate on top of 8" bank run gravel
Concrete Base	8" thick Class "F" concrete reinforced with wire mesh or rods equal to original reinforcing.
Surface Type	
Bituminous Concrete	Binder Course: 2" Class 1 or 2 Bituminous Concrete Surface Course: 2" Class 2 Bituminous Concrete

All bituminous pavement patches shall be laid in two courses.

Restoration of paving cuts shall be made after the temporary paving has been in place for thirty (30) days and within a three (3) month period except during winter months.

All restoration shall be made by a paving contractor familiar and experienced with paving practices in the Town of Vernon who has sufficient proper equipment and is approved by the Engineer.

Restoration of cuts is to be made from April 1st through November 15th so as to have a minimum of unrestored cuts during the winter months.

All cuts made during the winter season shall be permanently restored within one (1) month of the start of the next paving season or the contractor's license shall be suspended until such repairs are made.

When there is three feet (3') or less between a curb and the edge of the trench or excavation nearest the curb, the restoration of trench or excavation pavement shall be extended to the curb.

Work within resurfaced roadways:

If the proposed work includes excavation of a roadway that has been resurfaced within the past five (5) years, then the permanent repair of the roadway shall include the full width of the road, from curb to curb (See Plate 9).

If the proposed work includes excavation of a roadway that has been resurfaced between past six (6) years and ten (10) years, then the permanent repair of the roadway shall include a minimum of half of the width of the road (See Plate 10).

If the proposed work includes excavation of a roadway that has been resurfaced over ten (10) years ago, then the permanent repair of the roadway shall include the area of the utility trench plus a one (1) foot overcut (See Plate 11).

Methods:

The current standard paving specifications of the Engineering Department of the Town of Vernon shall be followed insofar as they apply.

In pavements with concrete base, the original cut shall be cut back at least one foot (1') onto undisturbed sub-grade on each side prior to replacing concrete. If the pavement has steel reinforcement, the reinforcement shall be carried through the cut as directed with at least twelve inches (12") of lap. The top surface shall be cut back straight and square for at least six inches (6") beyond the new concrete base. The top of the concrete patch shall be at the same level as the adjoining concrete.

The pavement shall be cut to neat straight lines not less than twelve inches (12") on each side from the edges of the original trench.

The edges of the pavement shall be clean and coated with hot asphalt or emulsion before any of the hot mix bituminous concrete is placed. The bottom layer shall be thoroughly compacted using a vibratory plate compactor. The top layer shall be thoroughly compacted to a smooth surface matching existing pavement and using a motor driven vibratory compactor with water dispersing equipment designed for use on bituminous concrete and/or a tandem ten-ton roller, as required by the Engineer. The joint between the patch and the existing pavement shall be sealed with hot asphalt.

Restoration of cuts shall be scheduled so as to complete them in minimum time and minimum interference with traffic. If there is a delay in obtaining the wearing surface, the binder shall be placed, barricades removed temporarily and traffic will be allowed to travel on the binder course.

TOWN OF VERNON

ENGINEERING DEPARTMENT

55 WEST MAIN ST., VERNON,CT 06066

STANDARD DETAIL

TYPICAL ROADWAY CROSS SECTION

NOT TO SCALE | REV. DATE: 10/28/08

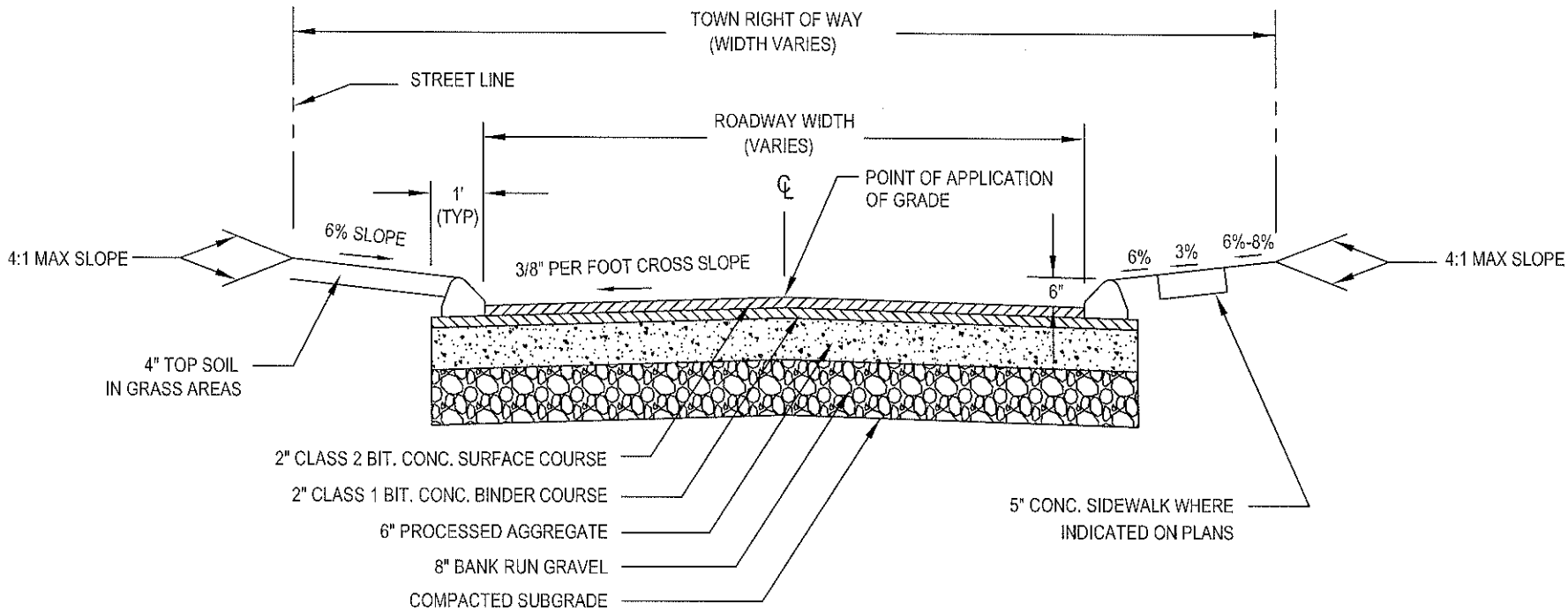

PLATE NO. 1

TOWN OF VERNON

ENGINEERING DEPARTMENT

55 WEST MAIN ST., VERNON,CT 06066

STANDARD DETAIL

CONCRETE SIDEWALK

NOT TO SCALE | REV. DATE: 4 / 12 / 00

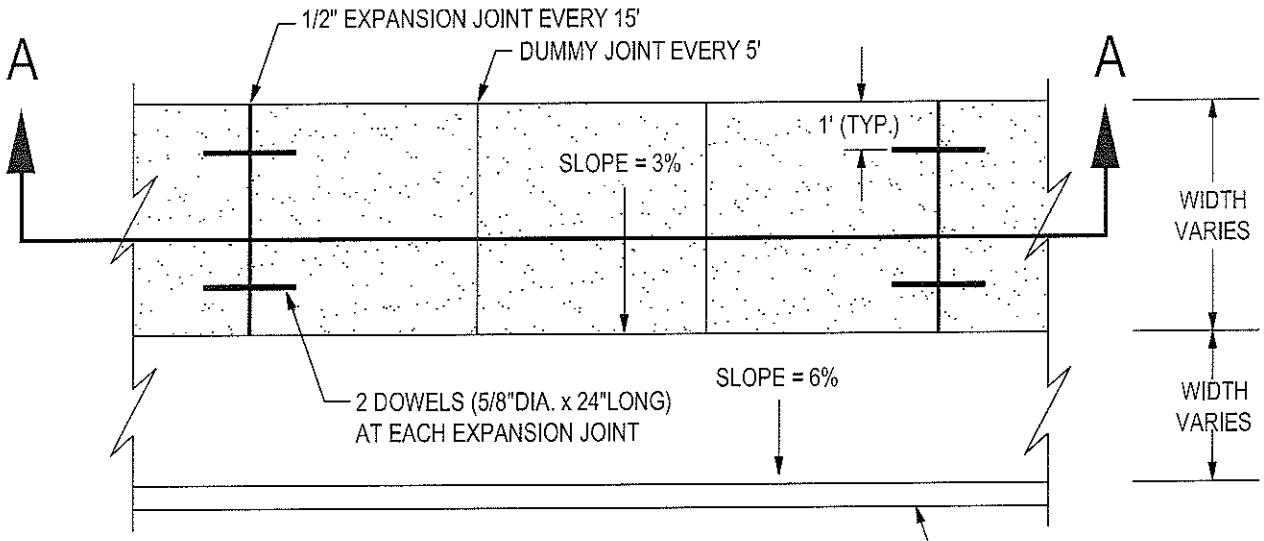

PLAN VIEW

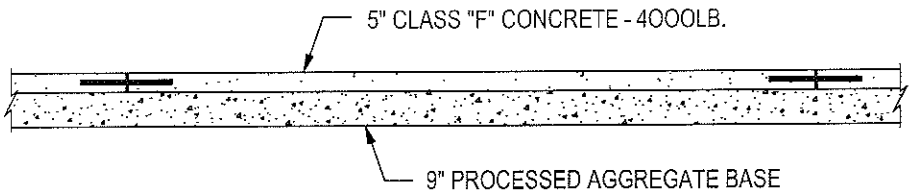

SECTION "A-A"

PLATE NO. 2

TOWN OF VERNON

ENGINEERING DEPARTMENT

55 WEST MAIN ST., VERNON,CT 06066

STANDARD DETAIL

CONCRETE HANDICAP RAMP

NOT TO SCALE | REV. DATE: 4 / 12 / 00

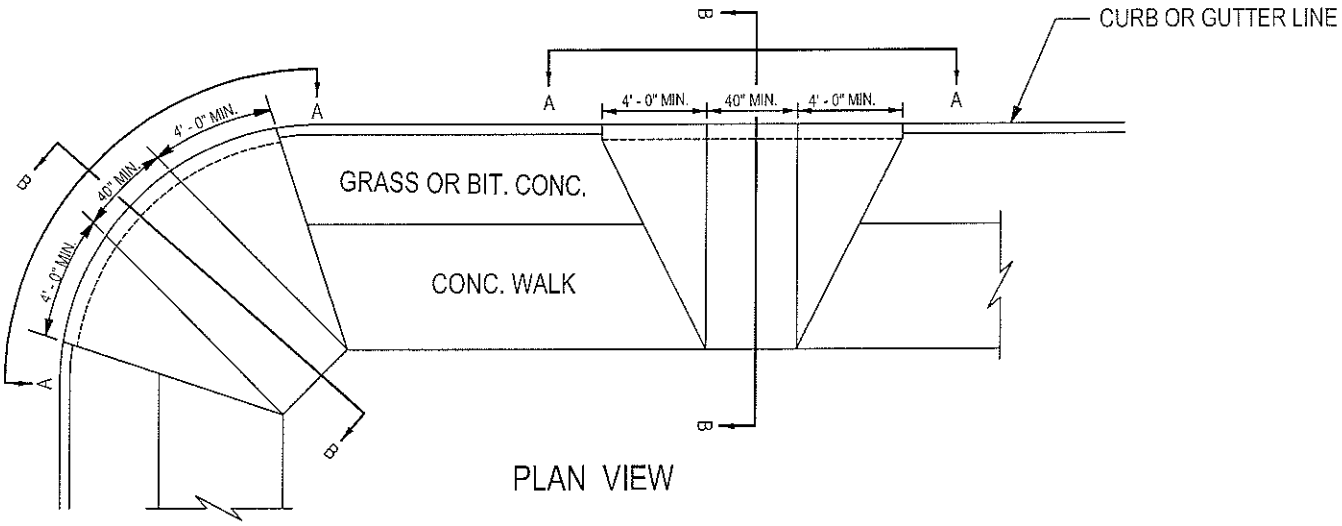

PLAN VIEW

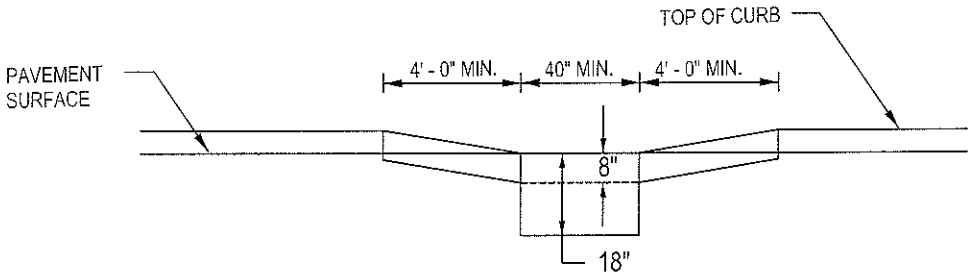

SECTION A-A

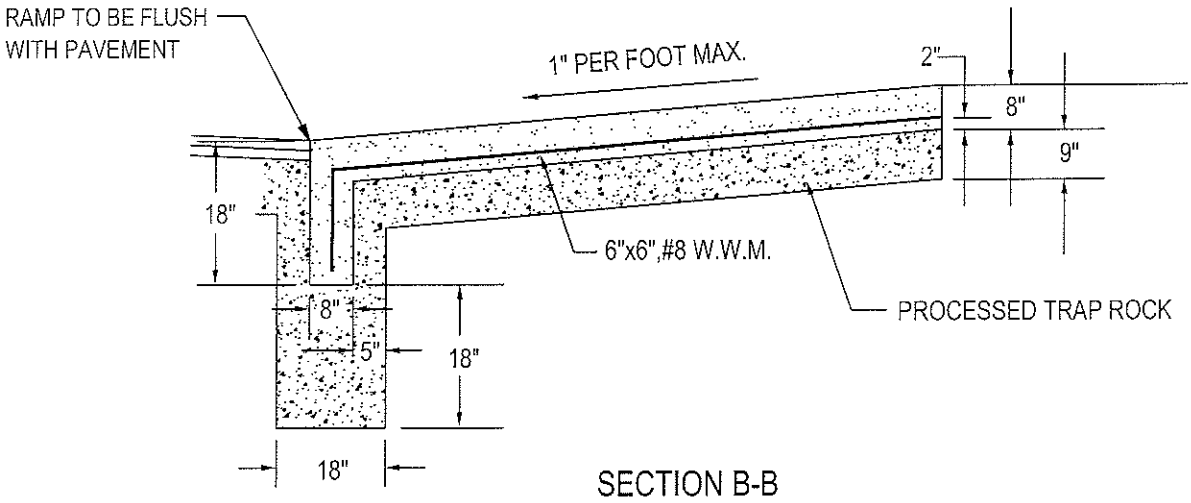

SECTION B-B

PLATE NO. 3

TOWN OF VERNON

ENGINEERING DEPARTMENT

55 WEST MAIN ST., VERNON,CT 06066

STANDARD DETAIL

CAST IN PLACE ADA DETECTABLE WARNING STRIP

NOT TO SCALE | REV. DATE: 10/28/08

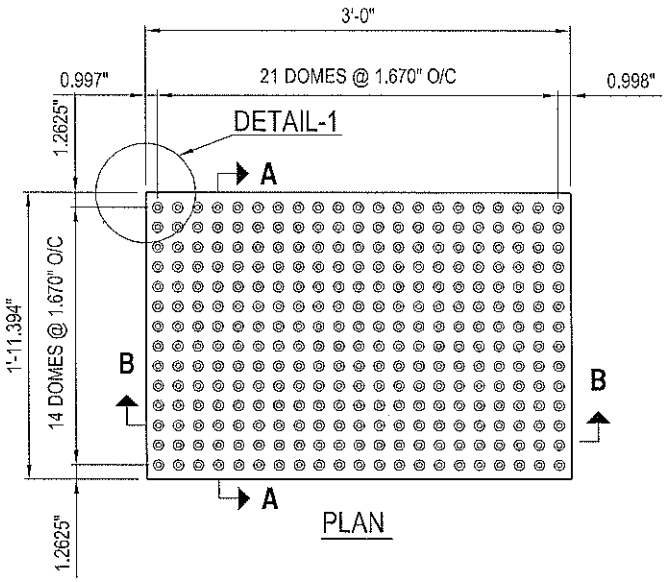

PLAN

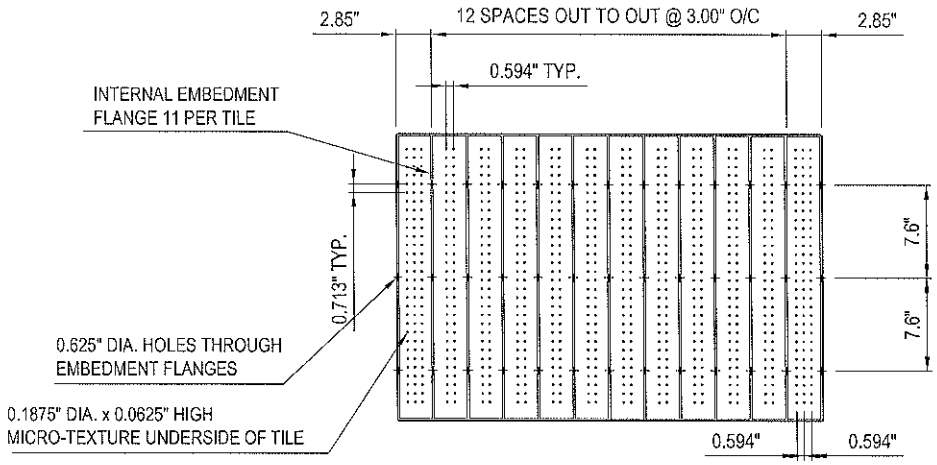

REFLECTED PLAN

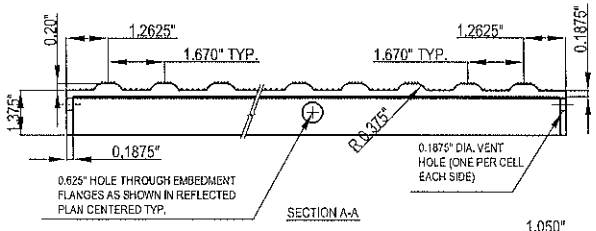

SECTION A-A

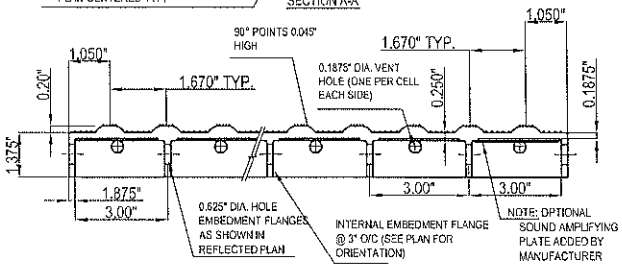

SECTION B-B

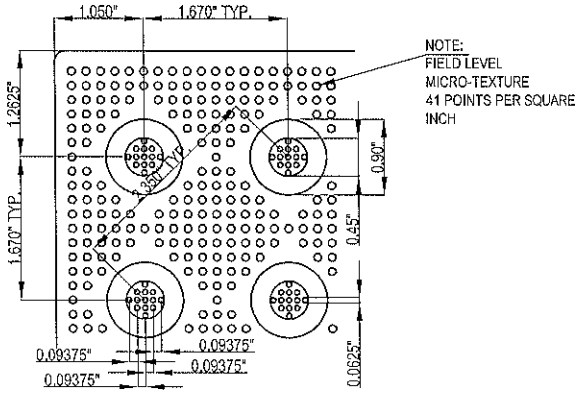

DETAIL

PLATE NO. 4

TOWN OF VERNON

ENGINEERING DEPARTMENT

55 WEST MAIN ST., VERNON,CT 06066

STANDARD DETAIL

CONRETE DRIVEWAY CROSS SECTION

NOT TO SCALE | REV. DATE: 4 / 12 / 00

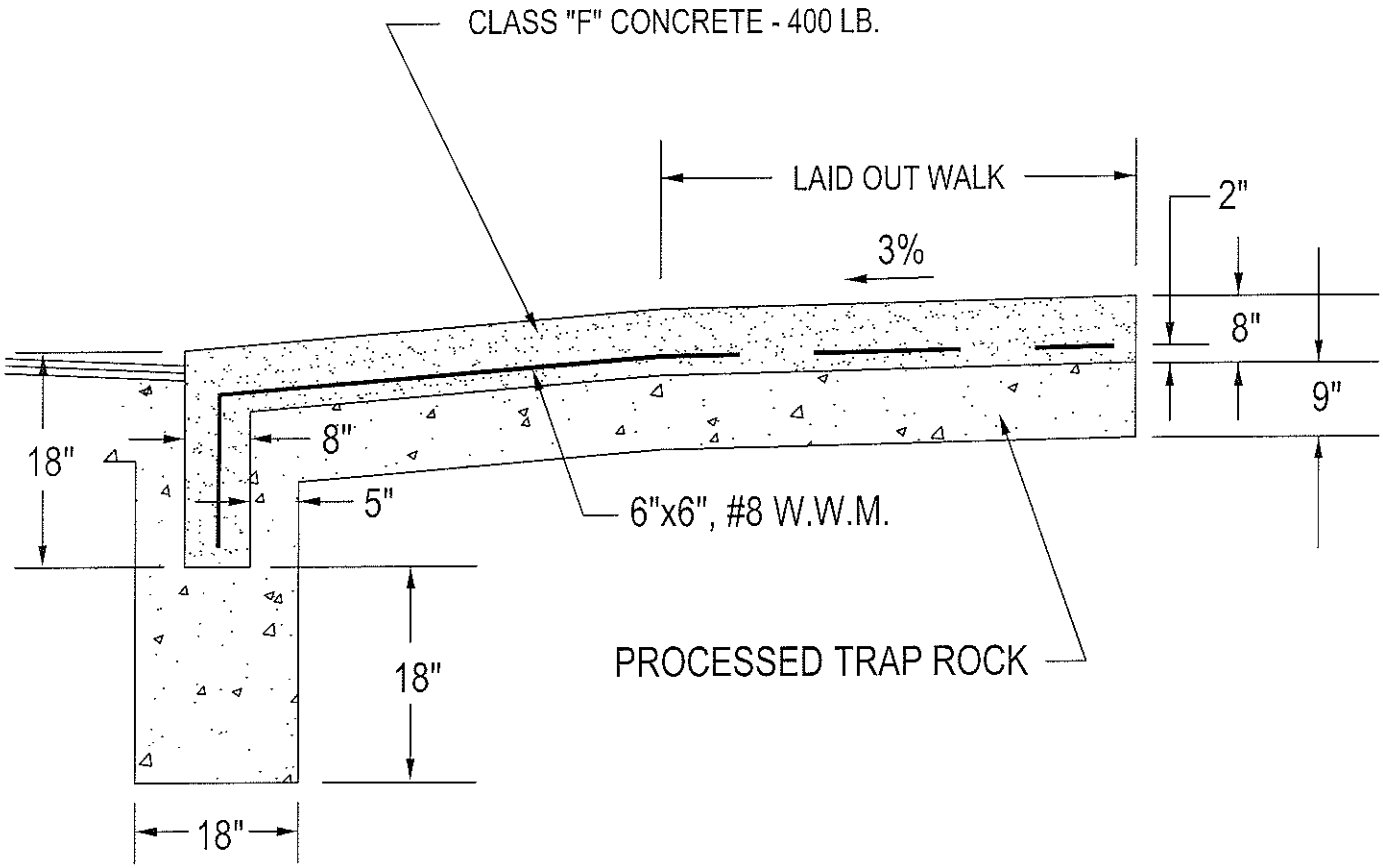

PLATE NO. 5

TOWN OF VERNON

ENGINEERING DEPARTMENT

55 WEST MAIN ST., VERNON,CT 06066

STANDARD DETAIL

CONRETE DRIVEWAY SCORING PATTERN

NOT TO SCALE | REV. DATE: 4 / 12 / 00

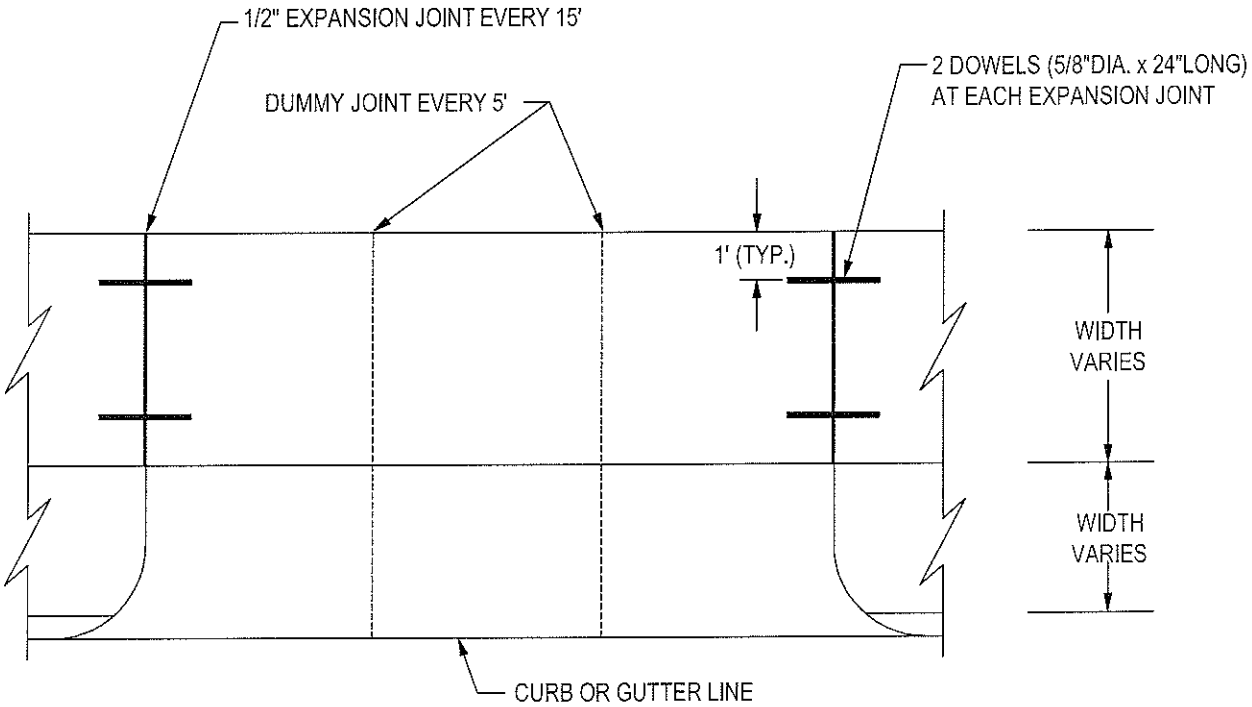

PLATE NO. 6

TOWN OF VERNON

ENGINEERING DEPARTMENT

55 WEST MAIN ST., VERNON,CT 06066

STANDARD DETAIL

PERMANENT PAVEMENT PATCH

NOT TO SCALE | REV. DATE: 4 / 12 / 00

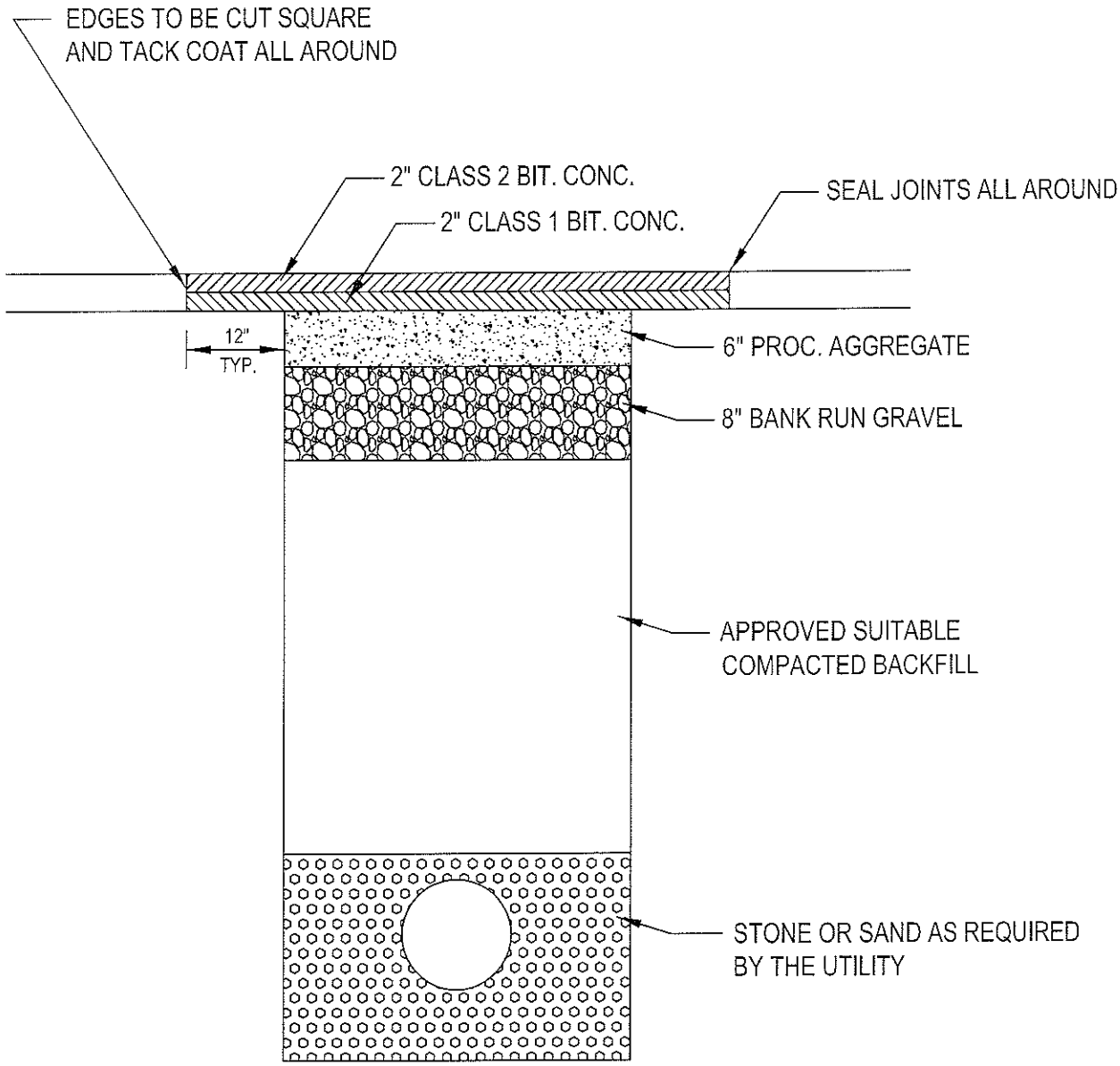

NOTE: SEE PLATES 9, 10 & 11 FOR LIMITS OF THE PERMANENT PAVEMENT PATCH

PLATE NO. 7

TOWN OF VERNON

ENGINEERING DEPARTMENT

55 WEST MAIN ST., VERNON,CT 06066

STANDARD DETAIL

GRANITE & BITUMINOUS CURBING

NOT TO SCALE | REV. DATE: 4 / 12 / 00

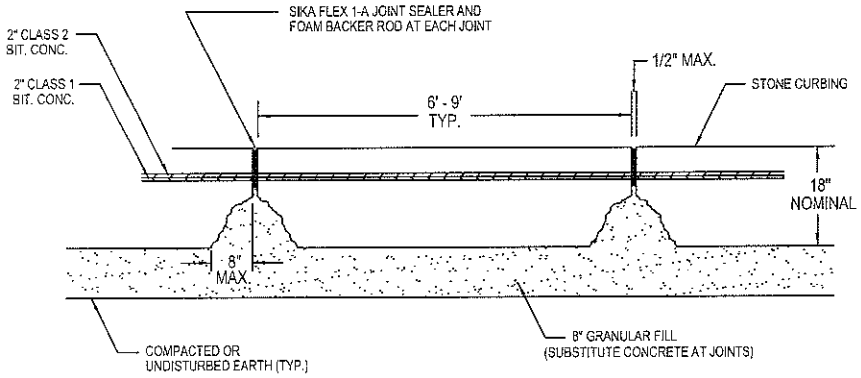

ELEVATION

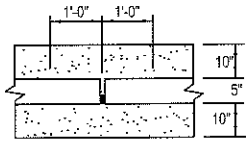

PLAN

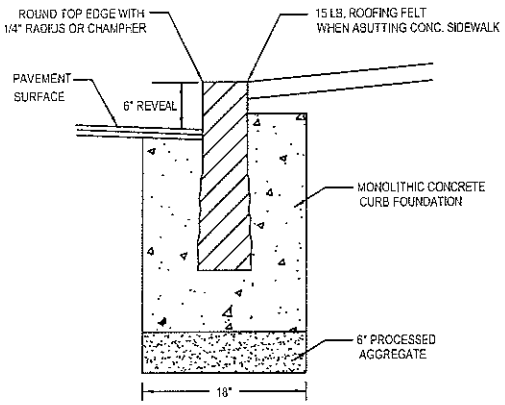

RADIUS CURB SECTION

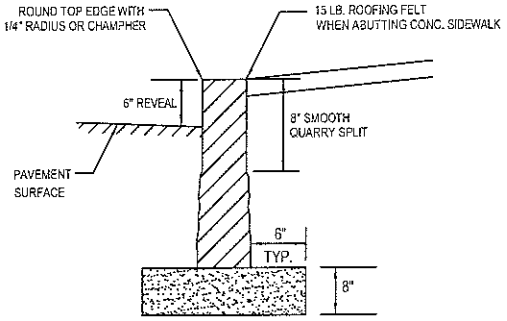

SECTION

NOTES:

1. GRANULAR FILL TO CONFORM TO CONN DOT FORM 816 ARTICLE M.02.01, GRADATION "A"
2. GRANULAR FILL, CLASS "C" CONCRETE, ROOFING FELT AND JOINT SEALER WITH BACKER ROD SHALL BE INCLUDED IN THE UNIT PRICE FOR "GRANITE STONE CURBING".

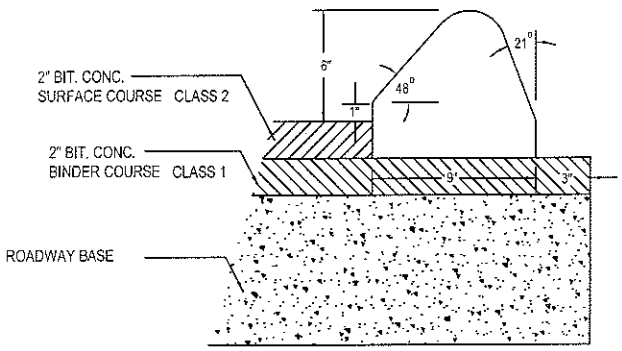

PLATE NO. 8

TOWN OF VERNON

ENGINEERING DEPARTMENT

55 WEST MAIN ST., VERNON,CT 06066

STANDARD DETAIL

UTILITY TRENCH PAVEMENT REPAIR IN ROADS 0 - 5 YEARS OLD

NOT TO SCALE | REV. DATE: 2/3/14

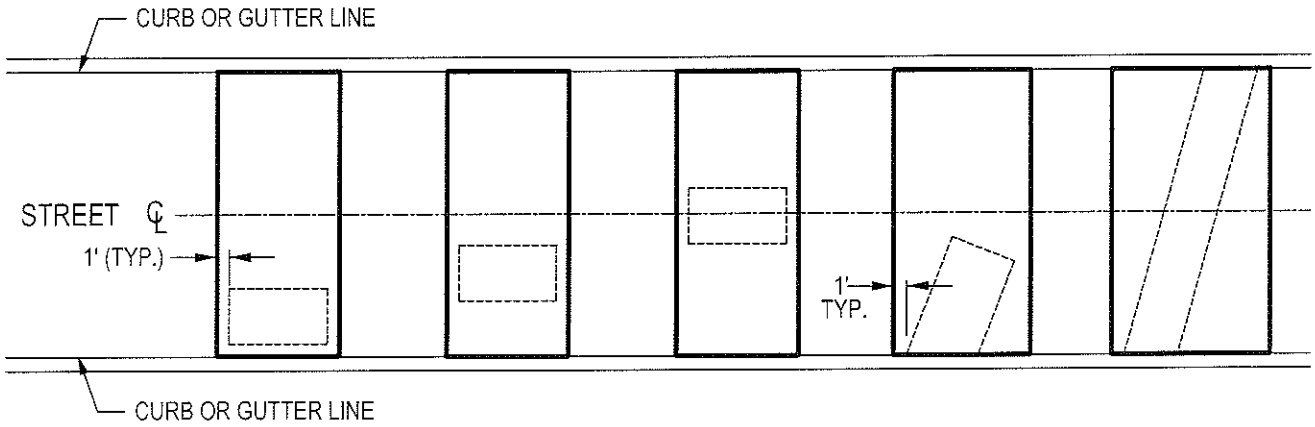

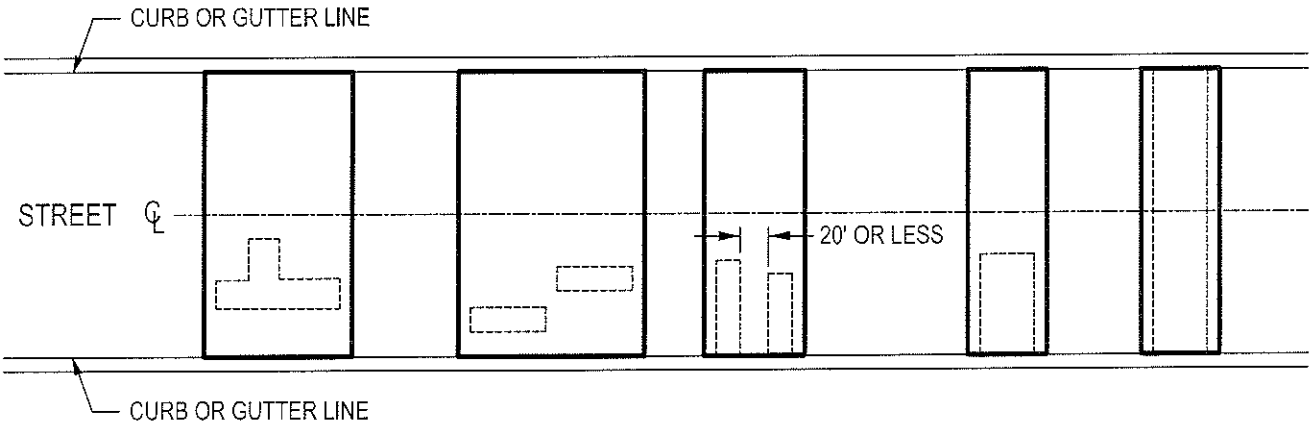

TRENCH LIMIT AT TOP OF PAVEMENT

LIMIT OF FULL DEPTH ROAD RECONSTRUCTION

NOTES: WHEN PAVEMENT IS LESS THAN 5 YEARS OLD

1. FULL DEPTH REPLACEMENT IS REQUIRED TO ONE FOOT BEYOND THE TRENCH LIMITS FOR THE ENTIRE ROAD WIDTH.
2. WHEN TWO TRENCHES ARE WITHIN TWENTY FEET OF EACH OTHER, THE TWO TRENCHES SHALL BE TREATED AS ONE.
3. APPLY TACK COAT TO ALL CUT EDGES PRIOR TO PAVING.

PLATE NO. 9

TOWN OF VERNON

ENGINEERING DEPARTMENT

55 WEST MAIN ST., VERNON,CT 06066

STANDARD DETAIL

UTILITY TRENCH PAVEMENT REPAIR IN ROADS 6 - 10 YEARS OLD

NOT TO SCALE | REV. DATE: 2/3/14

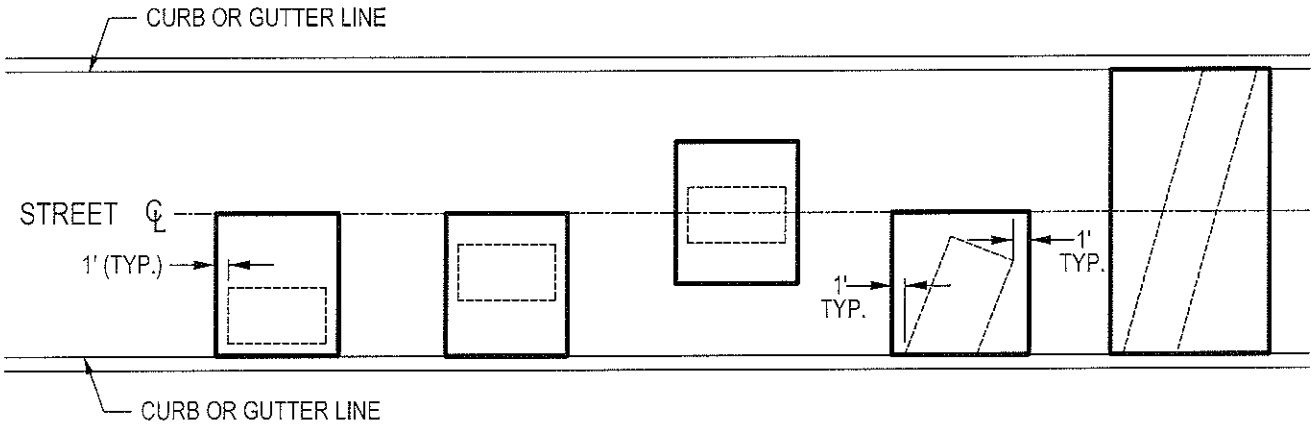

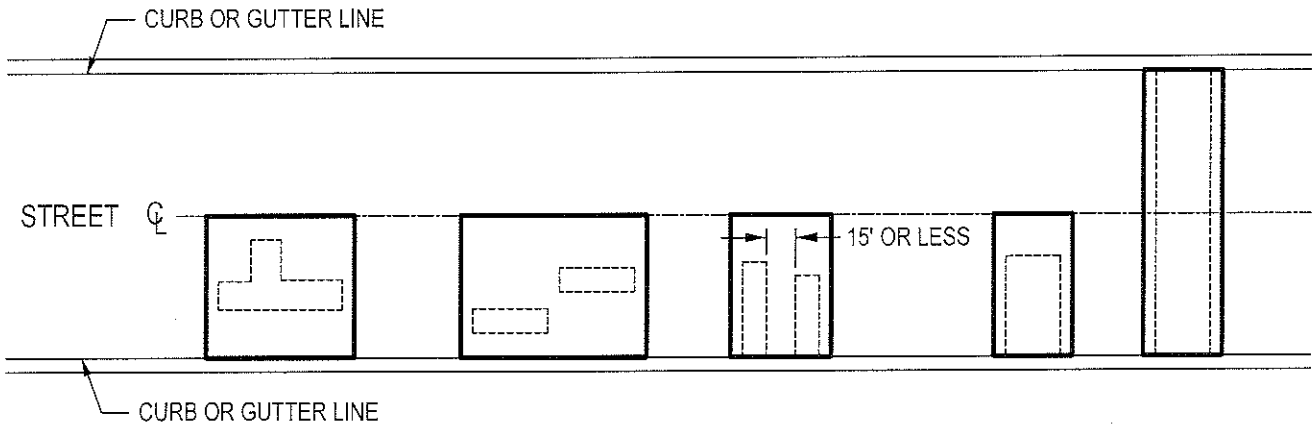

NOTES: WHEN PAVEMENT IS BETWEEN 6 & 10 YEARS OLD

1. FULL DEPTH REPLACEMENT IS REQUIRED TO ONE FOOT BEYOND THE TRENCH LIMITS FOR HALF OF THE ROAD WIDTH.
2. WHEN TWO TRENCHES ARE WITHIN FIFTEEN FEET OF EACH OTHER, THE TWO TRENCHES SHALL BE TREATED AS ONE.
3. APPLY TACK COAT TO ALL CUT EDGES PRIOR TO PAVING.

TRENCH LIMIT AT TOP OF PAVEMENT

LIMIT OF FULL DEPTH ROAD RECONSTRUCTION

PLATE NO. 10

TOWN OF VERNON

ENGINEERING DEPARTMENT

55 WEST MAIN ST., VERNON,CT 06066

STANDARD DETAIL

UTILITY TRENCH PAVEMENT REPAIR

IN ROADS OVER 10 YEARS OLD

NOT TO SCALE | REV. DATE: 2/3/14

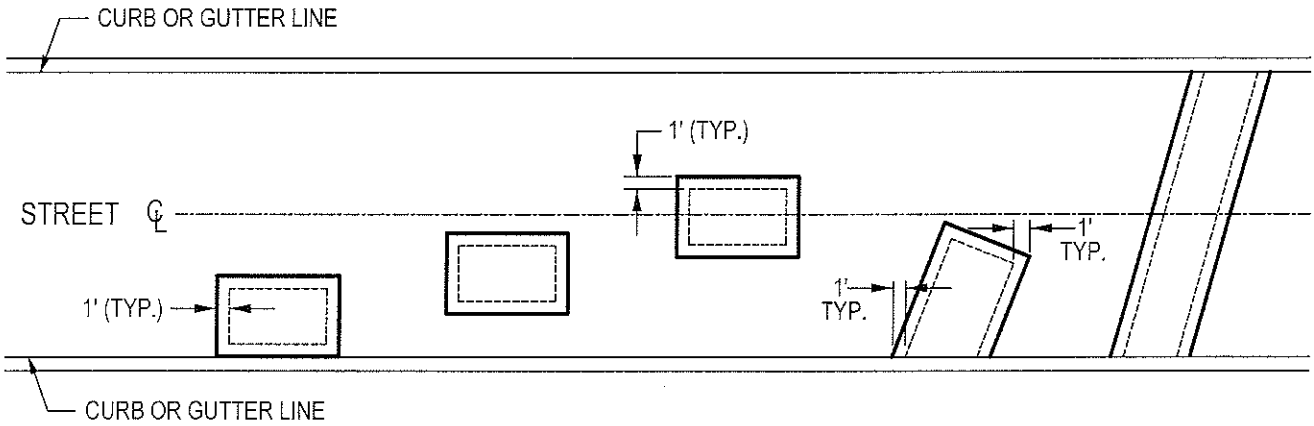

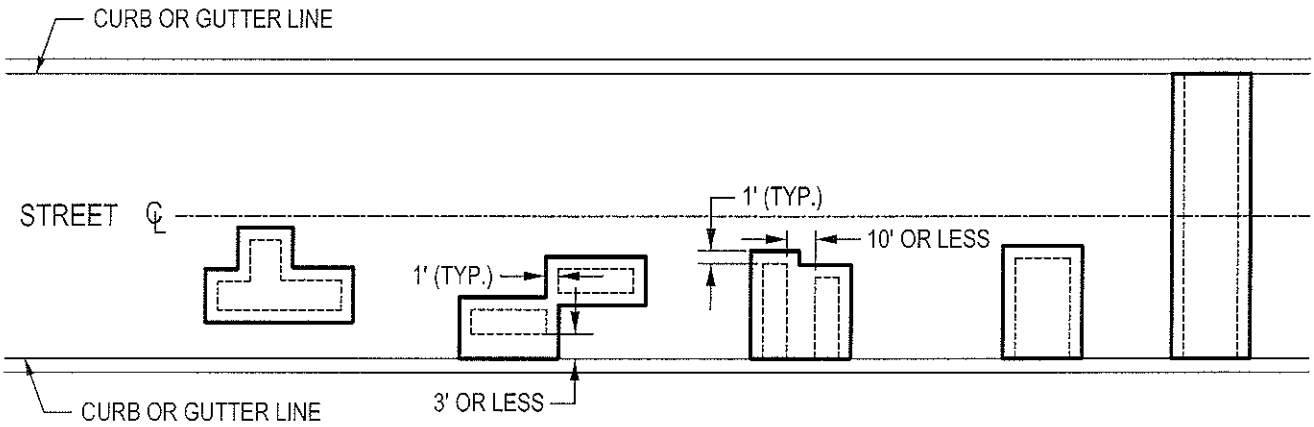

TRENCH LIMIT AT TOP OF PAVEMENT

LIMIT OF FULL DEPTH ROAD RECONSTRUCTION

NOTES: WHEN PAVEMENT IS MORE THAN 10 YEARS OLD

1. FULL DEPTH REPLACEMENT IS REQUIRED TO ONE FOOT BEYOND THE TRENCH LIMITS.
2. FULL DEPTH REPLACEMENT IS REQUIRED TO CURB LINE WHEN REMAINING DISTANCE BETWEEN CURB AND TRENCH IS THREE FEET OR LESS.
3. WHEN TWO TRENCHES ARE WITHIN TEN FEET OF EACH OTHER, THE TWO TRENCHES SHALL BE TREATED AS ONE.
4. APPLY TACK COAT TO ALL CUT EDGES PRIOR TO PAVING.

PLATE NO. 11